OWNER'S MANUAL

BULLS
BIKES

your riding experience begins here...

GREAT BIKERS

RIDE BULLS

Thanks for buying your new BULLS bike. We know that you share our passion for excellence and the exhilaration of a great riding experience. You can be assured that this bike has been designed by some of the world's leading bike designers and has been put through rigorous testing. When it comes to specifications, we've fitted your bike with the best components, which ensure it offers superior performance combined with fantastic durability. You can be sure that your new BULLS will remain in top condition by following the advice in this owner's handbook. Well maintained, your BULLS bike will continue to exceed your expectations.

Karl Platt
Team BULLS MTB
4 times winner Cape Epic - South Africa

BULLS
OWNER'S MANUAL

This manual contains important safety, performance and service information. Read it before you take the first ride on your new bicycle, and keep it for reference.

If you have any questions or do not understand something describe in this manual or your bicycle, please consult with a BULLS representative.

CONTENTS

GENERAL WARNINGS

Like any sport, bicycling involves risk of injury and damage. By choosing to ride a bicycle, you assume the responsibility for that risk, so you need to know — and to practice — the rules of safe and responsible riding, as well as proper use and maintenance. Proper use and maintenance of your bicycle reduces risk of injury.

This Manual contains many "Warnings" and "Cautions" concerning the consequences of failure to maintain or inspect your bicycle and of failure to follow safe cycling practices.

> The combination of the safety alert symbol ⚠ and the word **WARNING** indicates a potentially hazardous situation, which, if not avoided, could result in serious injury or death.
> The combination of the safety alert symbol ⚠ and the word **CAUTION** indicates a potentially hazardous situation, which, if not avoided, may result in minor or moderate injury, or is an alert against unsafe practices.
> The word **CAUTION** used without the safety alert symbol indicates a situation, which, if not avoided, could result in serious damage to the bicycle or the voiding of your warranty.

Many of the Warnings and Cautions say "you may lose control and fall". Any fall can result in serious injury or even death, as such we do not always repeat the warning of possible injury or death.
It is impossible to anticipate every situation or condition which can occur while riding. This manual makes no representation about the safe use of the bicycle under all conditions. There are risks associated with the use of any bicycle which cannot be predicted or avoided, and which are the sole responsibility of the rider.

1. UNPACKING AND ASSEMBLING YOUR BULLS

Every BULLS bicycle comes with a specific "Unpacking and Assembling" manual with detailed instructions on how to unpack and assemble your BULLS.

Please take into consideration that while assembling your BULLS is an easy process, you should proceed with careful handling as the incorrect assembly may cause your bicycle to perform unsafely.

IMPORTANT! Your BULLS BIKEBOX is re-usable and you will need it to ship back your BULLS in, in case of returns or requested services. Do not tear it and keep it in a safe place

⚠CAUTION: Never attempt to ride a bicycle that is not properly assembled

2. BEFORE YOUR FIRST RIDE

NOTE: We strongly advise you to read this Manual before your first ride. Please make sure that you understand each point in this section, and refer to the cited sections on any issue that you don't completely understand. If you have any questions or concerns, please contact a BULLS representative for assistance.

A. BIKE FIT

⚠WARNING: If your bicycle does not fit properly, you may lose control and fall. Please make sure you read and understand the instructions on Bike Fit so that you can adjust, to your needs, both the seat and handle bar of your BULLS as accurately as possible.

1. Adjusting the Seat to the Correct Height, Front / Back Adjustment, and Tilt

Correct seat adjustment is an important factor in getting the most performance and comfort from your bicycle.

Please refer to section 4.B "Seat Position"

2. Handlebar

Maximum comfort is usually obtained when the handlebar height is equal to the height of the seat. You may wish to try different heights to find the most comfortable position.

NOTE: Remember that your handlebar has been pre-calibrated and adjusted by our staff prior to shipping. You may adjust the handlebar angle but not the levers themselves.
Please refer to section 4.C "Handlebar Height and Angle" if you wish to adjust your handlebar.

3. Brakes: Checking and Adjusting Disc Brakes

Regularly check all of the lines and connections for any leaks as you continually pull the brake lever. If you see any hydraulic oil or brake fluid leaking out, immediately contact a BULLS representative or a professional bicycle mechanic as a leak can cause your brakes to become ineffective.

Check your brake pads for wear by inspecting the thickness of the braking pad attached to the back plate inside the brake caliper. You can also do this by looking through the window on the upper

side of the caliper. If there is approximately 1mm or less remaining of the pad, remove and replace the pad according to the manufacturer's operating instructions.

IMPORTANT: When replacing any parts of your BULLS, make sure you only use original spare parts!

⚠**WARNING:** Manufacturers of disc brakes deliver their products with detailed operating instructions. Make sure you read and understand them before you attempt to perform any work on your BULLS. Dirty brake pads and rotors can drastically reduce your BULLS braking power. Therefore, make sure the brake remains free of oil and other fluids, especially when you clean your bicycle or grease the chain. Dirty brake pads can under no circumstances be cleaned. They must be replaced! Rotors can be cleaned with warm water and mild soap. There are also special brake cleaners available

B. SAFETY FIRST

Always wear an approved helmet when riding your BULLS, and follow the helmet manufacturer's instructions for fit, use and care.

Do you have all the other required and recommended safety equipment? See Section 3 (Safety). It is your responsibility to familiarize yourself with the laws of the areas where you ride, and to comply with all applicable laws.

Do you know how to correctly secure your front and rear wheels? Check section 5.A.1 (Secondary Retention Devices) for reference. Riding with an improperly secured wheel can cause the wheel to wobble or disengage from the bicycle, and cause serious injury or death.

If your bike has toeclips and straps or clipless ("step-in") pedals, make sure you know how they work (see Section 4.E Brake Reach). These pedals require special techniques and skills. Follow the pedal manufacturer's instructions for use, adjustment and care.

Do you have "toe overlap?" On smaller framed bicycles, your toe may be able to touch the front wheel when a pedal is all the way forward and the wheel is turned. Read Section 5.E (Pedals) to check whether you have toe overlap.

Does your BULLS have suspension? If so, check Section 5.F (Bicycle Suspension). Suspension can change the way a bicycle performs. Follow the suspension manufacturer's instructions for use, adjustment and care.

C. MECHANICAL SAFETY CHECK

Routinely check the condition of your bicycle before every ride.

Nuts, bolts screws & other fasteners:
Component manufacturers use an array of fastener sizes and shapes made in a variety of materials. These often differ by model and component, for this reason the correct tightening force or torque cannot be generalized. To be sure that the many fasteners on your bicycle are correctly tightened, refer to the Fastener Torque Specifications in Appendix D of this manual or to the torque specifications in the instructions provided by the manufacturer of the specific component. Correctly tightening a fastener requires a calibrated torque wrench.
A professional bicycle mechanic with a torque wrench should tighten the fasteners on your bicycle. If you choose to work on your own bicycle, you must use a torque wrench and the correct tightening torque specifications from the bicycle manual, the component manufacturer or from a qualified bicycle mechanic. If you need to make an adjustment at home or on the field, we urge you to exercise care and to have the fasteners you adjusted to be checked by a qualified bicycle mechanic as soon as possible

⚠**WARNING:** Correct tightening force on fasteners –nuts, bolts, screws– on your bicycle is important. Too little force, and the fastener may not hold securely. Too much force, and the fastener can strip threads, stretch, deform or break. Incorrect tightening force can result in component failure, which may cause you to loose control and fall.

1. **Make sure nothing is loose.** Lift the front wheel off the ground by two or three inches. Then, let it bounce on the ground. Does anything sound, feel or look loose? Do a visual and tactile inspection of the whole bicycle. Are there any loose parts or accessories? If so, secure them. If you are not sure, contact a BULLS representative or your qualified bicycle mechanic
2. **Tires and wheels:** Make sure tires are correctly inflated. See section 5.G (Tires and Tubes). Check by first putting one hand on the seat and the other on the intersection of the handlebars and stem. Then, lean your weight on the bicycle while observing the tire deflection. Compare what you see now with how it looks when you know the tires are properly inflated. Adjust if necessary.
3. **Are the tires in good shape?** Spin each wheel slowly and look for cuts in the tread and sidewalls. Replace damaged tires before riding the bicycle.
4. **Are the wheels true?** Spin each wheel and check for brake clearance and side-to-side wobble. If a wheel wobbles side to side even slightly, or rubs against or hits the brake pads, take the

bicycle to your qualified bicycle mechanic to have the wheel trued.

⚠**CAUTION:** Wheels must be true for rim brakes to work effectively. Wheel truing is a skill that requires special tools and experience. Do not attempt to rue a wheel unless you have the knowledge, experience and tools needed to do the job correctly.

5. Are the wheel rims clean and undamaged? Check at the tire bead and along the braking surface.

⚠**WARNING:** Bicycle wheel rims are subject to wear. Ask a BULLS representaive or your qualified bicycle mechanic about wheel rim wear. Riding a wheel that is at the end of its usable life can result in wheel failure, which can cause you to lose control and fall.

6. Brakes: Check the brakes for proper operation. See Section 5.C (Brakes). Are the brake quick-releases closed? Are all control cables seated and securely engaged? Squeeze the brake levers. Do the brake pads contact the wheel rim squarely and make full contact with the rim? Do the brakes begin to engage within an inch of brake lever movement? Can you apply full braking force at the levers without having them touch the handlebar? If not, your brakes need adjustment. Do not ride the bicycle until a professional bicycle mechanic properly adjusts the brakes.

7. **Quick Releases (wheel retention system):** Make sure the front and rear wheels are correctly secured. See Section 5.A and 5.B for more information on this.

8. **Handlebar and seat alignment:** Make sure the seat and handlebar stem are parallel to the bicycle's center line and clamped tight enough so that you can't twist them out of alignment. See Sections 4.B and 4.C (Seat Position and Handlebar Height and Angle).

⚠**WARNING:** Loose or damaged handlebar grips or extensions can cause you to lose control and fall. Unplugged handlebars or extensions can cut you and cause serious injury in an otherwise minor accident.

IMPORTANT SAFETY NOTE: Please also read and become thoroughly familiar with the important information on the lifespan of your BULLS and its components in Appendix B.

D. FIRST RIDE

When you buckle on your helmet and go for your first familiarization ride on your new BULLS, make sure you pick a controlled environment, away from cars, other cyclists, obstacles or other hazards. Ride to become familiar with the controls, features and performance of your new BULLS.

Familiarize yourself with the braking action of the bike (see Section 5.C Brakes). Test the brakes at slow speed, putting your weight over the seat and gently applying the brakes, rear brake first. Sudden or excessive application of the front brake could pitch you over the handlebars. Applying brakes too hard can lock up a wheel, which could cause you to lose control and fall. Skidding is another example of what can happen when a wheel locks up.

If your bicycle has toeclips or clipless pedals, practice getting in and out of the pedals.

If your bike has suspension, familiarize yourself with how the suspension responds to brake application and rider weight shifts.

⚠**CAUTION:** Never shift gears while pedaling backward, and do not pedal backwards immediately after having shifted. This could jam the chain and cause serious damage to the bicycle.

Check out the handling and response of your BULLS; and check for comfort.

If you have any questions, or if you feel anything about the bike is not as it should be, consult a BULLS representative.

3. SAFETY

A. THE BASICS

⚠**WARNING:** The area in which you ride may require specific safety devices. It is your responsibility to familiarize yourself with the laws of the area where you ride and to comply with all applicable laws, including properly equipping yourself and your bike as the law requires.

⚠**WARNING:** Observe all local bicycle laws and regulations. Observe regulations about bicycle lighting, licensing of bicycles, riding on sidewalks, laws regulating bike path and trail use, helmet laws, child carrier laws, and special bicycle traffic laws. It is your responsibility to know and obey the laws.

Always wear a cycling helmet, which meets the latest certification standards and is appropriate for the type of riding you do. Always follow the helmet manufacturer's instructions for fit, use and care of your helmet. Most serious bicycle injuries involve head injuries, which might have been avoided if the rider had worn an appropriate helmet.

⚠**WARNING:** Failure to wear a helmet when riding may result in serious injury or death.

Always do a Mechanical Safety Check (Section 2.C Mechanical Safety Check) before you get on your BULLS.

Be thoroughly familiar with the controls of your BULLS: brakes (Section 5.C "Brakes"); pedals (Section 5.E "Pedals"); shifting (Section 5.D "Shifting Gears").

Be careful to keep body parts and other objects away from the sharp teeth of the chainrings, the moving chain, the turning pedals and cranks, and the spinning wheels of your bicycle.

Always wear:

a. Shoes that will stay on your feet and will grip the pedals. Make sure that shoelaces cannot get into moving parts, and never ride barefoot or in sandals.

b. Bright, visible clothing that is not loose. Loose clothing can get tangled in the bicycle or snagged by obstructions at the side of the road or trail.

c. Protective eyewear, to protect against airborne dirt, dust and bugs — tinted when the sun is bright, clear when it's not.

Don't jump with your bike. Jumping a bike, particularly a BMX or mountain bike, can be fun; but it can put a huge and unpredictable stress on the bicycle and its components. Riders who insist on jumping their bikes, risk serious damage to their bicycles as well as to themselves. Before you attempt to jump, stunt ride or race with your bike, read and understand Section 3.F "Extreme, Stunt or Competition Riding."

Ride at a speed appropriate for conditions. Higher speed means higher risk.

B. RIDING SAFETY

Obey all rules of the road and all local traffic laws.

You are sharing the road or the path with others — motorists, pedestrians and other cyclists. Respect their rights.

Ride defensively. Always assume that others do not see you.

Look ahead, and be ready to avoid:

a. Vehicles slowing or turning, entering the road or the lane ahead of you, or coming up behind you.

b. Parked car doors opening.

c. Pedestrians stepping out.

d. Children or pets playing near the road.

e. Pot holes, sewer gratings, railroad tracks, expansion joints, road or sidewalk construction, debris and other obstructions that could cause you to swerve into traffic, catch your wheel or cause you to have an accident.

f. There are many other hazards and distractions which can occur on a bicycle ride. Take caution.

5. Ride in designated bike lanes, on designated bike paths or as close to the edge of the road as possible, in the direction of traffic flow or as directed by local governing laws.

6. Stop at "stop signs" and traffic lights; slow down and look both ways at street intersections. Remember that a bicycle always loses in a collision with a motor vehicle, so be prepared to yield even if you have the right of way.

7. Use approved hand signals for turning and stopping.

8. Never ride with headphones. They mask traffic sounds and emergency vehicle sirens, distracting you from concentrating on what's going on around you. Their wires can also become tangled in the moving parts of the bicycle, causing you to lose control.

9. Never carry a passenger, unless it is a small child wearing an approved helmet and secured in a correctly mounted child carrier or a child-carrying trailer.

10. Never carry anything which obstructs your vision, impairs your complete control of the bicycle, or could become entangled in the moving parts of the bicycle.
11. Never hitch a ride by holding on to another vehicle.
12. Do not perform stunts, wheelies or jumps. If you intend to do stunts, wheelies, jumps or race with your bike despite our advice against such riding, read Section 3.F "Extreme, Stunt or Competition Riding", now. Think carefully about your skills before deciding to take the large risks that go with this kind of riding.
13. Do not weave through traffic or make any moves that may surprise the people with whom you are sharing the road.
14. Observe and yield the right of way.
15. Never ride your bicycle while under the influence of alcohol or drugs.
16. If possible, avoid riding in bad weather, when visibility is obscured, at dawn, dusk or in the dark, or when extremely tired. Each of these conditions increases the risk of accident.

C. OFF ROAD SAFETY

IMPORTANT: We recommend that children do not ride on rough terrain unless they are accompanied by an adult.

1. The variable conditions and hazards of off-road riding require close attention and specific skills. Start slowly on easier terrain and build up your skills. If your bike has suspension, the increased speed you may develop also increases your risk of losing control and falling. Know how to handle your bike safely before increasing speed or navigating more difficult terrain.
2. Wear safety gear appropriate to the kind of riding you plan to do.
3. Don't ride alone in remote areas. Even when riding with others, make sure that someone knows where you're going and when you expect to be back.
4. Always take identification with you, so that people can identify you in case of an accident. Also take cash for food, a cool drink or an emergency phone call.
5. Yield the right of way to pedestrians and animals. Ride in a way that does not frighten or endanger others, and give them enough room so that their unexpected moves don't endanger you.
6. Be prepared. If something goes wrong while you're riding off-road, help may not be close.
7. Before you attempt to jump, stunt ride or race with your bike, read and understand Section 3.F "Extreme, Stunt or Competition Riding."

Obey local laws regulating where and how you can ride off-road, and respect private property. You may be sharing the trail with others — hikers, equestrians and other cyclists. Respect their rights. Stay on the designated trail.

♻Don't contribute to erosion by riding in mud or with unnecessary sliding. Don't disturb the ecosystem by cutting your own trail or shortcut through vegetation or streams. It is your responsibility to minimize your impact on the environment.

♻Leave things as you found them; and always take out everything you brought in.

D. WET WEATHER RIDING

⚠**WARNING:** Wet weather impairs traction, braking and visibility, both for the bicyclist and for other vehicles sharing the road. The risk of an accident is dramatically increased in wet conditions.

Under wet conditions, the stopping power of your brakes (as well as the brakes of other vehicles sharing the road) is dramatically reduced and your tires will not grip nearly as well. This makes it harder to control speed and easier to lose control. To make sure that you can slow down and stop safely in wet conditions, ride slowly and apply your brakes earlier and more gradually than you would under normal, dry conditions. See also Section 5.C "Brakes."

E. NIGHT RIDING

Riding a bicycle at night is significantly more dangerous than riding during the day. A bicyclist is very difficult for motorists and pedestrians to see. Therefore, children should never ride at dawn, at dusk or at night. Adults who choose to accept the greatly increased risk of riding at dawn, at dusk or at night need to take extra care in both riding and in choosing specialized equipment, which helps reduce that risk. Consult a BULLS representative about night riding safety equipment.

⚠**WARNING:** Reflectors are not a substitute for required lights. Riding at dawn, at dusk, at night or at other times of poor visibility without an adequate bicycle lighting system and without reflectors is dangerous and may result in serious injury or death.

Bicycle reflectors are designed to pick up and reflect car lights and streetlights in a way that may help you to be seen and recognized as a moving bicyclist.

⚠**CAUTION:** Check reflectors and their mounting brackets regularly to make sure that they are clean, straight, unbroken and securely mounted. Have a professional bicycle mechanic replace damaged reflectors and straighten or tighten any that are bent or loose.

The mounting brackets for front and rear reflectors are often designed with brake straddle cable safety catches which prevent the straddle cable from catching on

the tire tread if the cable jumps out of its yoke or breaks.

⚠**WARNING:** Do not remove the front or rear reflectors or reflector brackets from your bicycle. They are an integral part of the bicycle's safety system.
⚠**WARNING:** Removing the reflectors reduces your visibility to others using the roadway. Being struck by other vehicles may result in serious injury or death.

The reflector brackets may protect you from a brake straddle cable catching on the tire in the event of a brake cable failure. If a brake straddle cable catches on the tire, it can cause the wheel to stop suddenly, causing you to loose control and fall.

If you choose to ride under conditions of poor visibility, be sure that you are in compliance with all local laws about night riding. Also take the following strongly recommended additional precautions:

1. Purchase and install battery or generator powered head and taillights which meet all regulatory requirements and provide adequate visibility.
2. Wear light colored, reflective clothing and accessories, such as a reflective vest, reflective arm and leg bands, reflective stripes on your helmet, flashing lights attached to your body and/or your bicycle. Wearing any reflective device or light source that moves and will get the attention of approaching motorists, pedestrians and other traffic is helpful for bike safety.
3. Make sure your clothing or anything you may be carrying on the bicycle does not obstruct a reflector or light.
4. Make sure that your bicycle is equipped with correctly positioned and securely mounted reflectors.

While riding at dawn, at dusk or at night:

1. Ride slowly.
2. Avoid dark areas and areas of heavy or fast-moving traffic.
3. Avoid road hazards.
4. If possible, ride on familiar routes.

If riding in traffic:

1. Be predictable. Ride so that drivers can see you and predict your movements.
2. Be alert. Ride defensively and expect the unexpected.
3. If you plan to ride in traffic often, ask your local mechanic about traffic safety classes or a good book on bicycle traffic safety.

F. EXTREME, STUNT OR COMPETITION RIDING

Whether you call it Aggro, Hucking, Freeride, North Shore, Downhill, Jumping, Stunt Riding, Racing or something else: if you engage in any sort of extreme, aggressive riding you will get hurt, and you voluntarily assume a greatly increased risk of injury or death.

Not all bicycles are designed for these types of riding, and those that are may not be suitable for all types of aggressive riding. Check in the description of your BULLS in www.bullsbikesusa.com about the suitability of your BULLS before engaging in extreme riding.

When riding fast down hill, you can reach speeds achieved by motorcycles, and therefore face similar hazards and risks. Have your bicycle and equipment carefully inspected by a qualified mechanic and be sure it is in perfect condition.

Consult with expert riders, area site personnel and race officials on conditions and equipment advisable at the site where you plan to ride. Wear appropriate safety gear, including an approved full face helmet, full finger gloves, and body armor. Ultimately, it is your responsibility to have proper equipment and to be familiar with course conditions.

⚠**WARNING:** Although many catalogs, advertisements and articles about bicycling depict riders engaged in extreme riding, this activity is extremely dangerous, increases your risk of injury or death, and increases the severity of any injury. Remember that the action depicted is being performed by professionals with many years of training and experience. Know your limits and always wear a helmet and other appropriate safety gear. Even with state-of-the-art protective safety gear, you could be seriously injured or killed when jumping, stunt riding, riding downhill at high speeds or in competition.

⚠**WARNING:** Bicycles and bicycle parts have limitations with regard to strength and integrity, and this type of riding can exceed those limitations.

We recommend against this type of riding because of the increased risks; but if you choose to take the risk:

Take lessons from a competent instructor beforehand.

Start with easy learning exercises and slowly develop your skills before trying more difficult or dangerous riding.

Use only designated areas for stunts, jumping, racing or fast downhill riding.

Wear a full face helmet, safety pads and other safety gear.

Understand and recognize that the stresses imposed on your bike by this kind of activity may break or damage parts of the bicycle and void the warranty.

Take your bicycle to your expert local mechanic if anything breaks or bends. Do not ride your bicycle when any part is damaged.

If you choose to ride downhill at high speeds, stunt ride or ride in competition, know the limits of your skill and experience. **Ultimately, avoiding injury is your responsibility.**

G. CHANGING COMPONENTS OR ADDING ACCESSORIES

There are many components and accessories available to enhance the comfort, performance and appearance of your BULLS. However, if you change components or add accessories, you do so at your own risk.

⚠**WARNING:** The components and accessories sold with your BULLS have been tested for compatibility with your bicycle, reliability and safety. You should be aware that components from other manufacturers might not be suited for your BULLS.

⚠**WARNING:** Failure to confirm compatibility, properly install, operate and maintain any component or accessory can result in serious injury or death.

⚠**WARNING:** Replacing the components on your bike with articles other than genuine replacement parts may compromise the safety of your bicycle and may void the warranty. Check with a BULLS representative before changing the components on your bike.

4.FIT

Correct fit is an essential element of bicycling safety, performance and comfort. Making the adjustments to your bicycle that result in the correct fit for your body and riding conditions requires experience, skill and special tools. Always have an expert mechanic make the adjustments on your BULLS; or, if you have the experience, skill and tools, have an expert mechanic check your work before riding.

⚠**WARNING:** If your BULLS does not fit properly, you may lose control and fall. If your new BULLS doesn't fit properly, please contact a BULLS representative inmediately.

A. STANDOVER HEIGHT

1. Diamond frame bicycles (figure 1):

Standover height is the basic element of bike fit. It is the distance from the ground to the top of the bicycle's frame at the point where your crotch is when straddling the bike (figure 2). To check for correct standover height, straddle the bike while wearing the kind of shoes in which you'll be riding, and bounce vigorously on your heels. If your crotch touches the frame, the bike is too big for you. Do not attempt to ride a bike that is too big for you. A bike designed for paved surfaces and never taken off-road should give you a minimum standover height clearance of two inches (5 cm). A bike that is designed for unpaved surfaces should give you a minimum of three inches (7.5 cm) of standover height clearance. A bike that is designed for off road use should give you four inches (10 cm) or more of clearance.

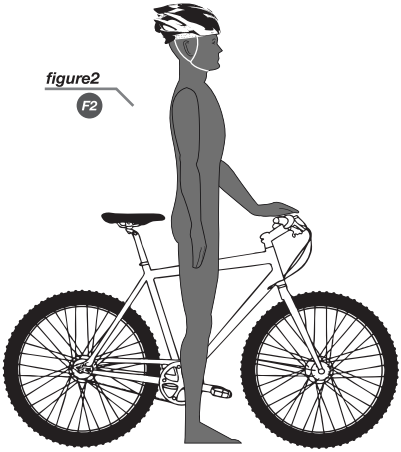

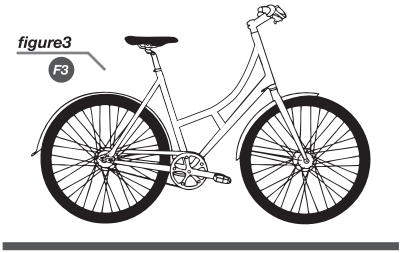

2. Step-through frame bicycles (figure 3):

Standover height does not apply to bicycles with step-through frames. Instead, the limiting dimension is determined by seat height range. You must be able to adjust your seat position without exceeding the limits set by the height of the top of the seat tube and the "Minimum Insertion" or "Maximum Extension" mark on the seat post.

B. SEAT POSITION

1. Adjusting the Seat to the Correct Height:

Correct seat adjustment is an important factor in getting the most performance and comfort from your BULLS.

By loosening the binder bolt or quick-release lever, your BULLS seat can be adjusted up and/or down for best comfort (figure 4):

Sit on the seat;
Place one heel on a pedal;
Rotate the crank until the pedal with your heel on it is at the lowest point and the crank arm is parallel to the seat tube.

⚠**CAUTION:** When pedaling, the upper inside of your foot sole should be positioned above the center of the pedal. With your feet in this position you should not be able to stretch your leg completely at the lowest point. If the seat is too high, you will have trouble passing through the lowest point and your pedaling will feel irregular. If the seat is too low, it may cause discomfort . Do not use excess force to adjust your seat. If you are unsure of how to do this, please contact a BULLS representative.

⚠**WARNING:** Once the seat is at the correct height, make sure that the seatpost does not project from the frame beyond its "Minimum Insertion" mark.

⚠**WARNING:** If your bike has an interrupted seat tube, as is the case on some bikes with rear suspension, you must also make sure that the seat post is far enough into the frame so that you can touch the seatpost through the bottom of the interrupted seat tube with the tip of your finger, without inserting your finger beyond its first knuckle. Ensure that the seatpost projecting from the interrupted seat tube does not interfere with the free movement of the rear suspension (figure 5).

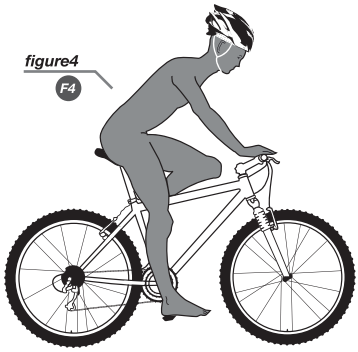

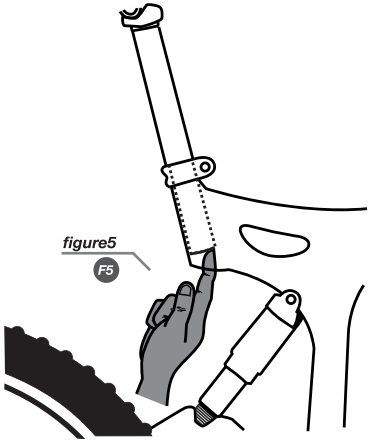

The seat position can be adjusted a short distance forwards or backwards, and tilted up or down at the point where it's connected to the seat pin.

To adjust the seat back or forth, loosen both seat clamp bolts at the top of the seat post. Turn the bolts anticlockwise no more than two to three times (to avoid the seat clamp to loosen completely). Then move the seat back or forth as desired between the limits marked on the seat rail. Make sure the seat remains horizontal as you tighten the bolt evenly and alternately. Stand your BULLS on flat ground while you adjust the seat. After fastening the seat check whether it is firm enough by applying weight on the front tip of the seat and then on the rear end of the seat.

⚠**WARNING:** After any seat adjustment, be sure that the seat adjusting mechanism is properly tightened before riding. A loose seat clamp or seat post binder can cause damage to the seat post, and could cause you to lose control and fall. A correctly tightened seat adjusting mechanism will allow no seat movement in any direction. Periodically check to make sure that the seat adjusting mechanism is properly tightened. If, in spite of carefully adjusting the seat height and/or the tilt and fore-and aft position, your seat is still uncomfortable, you may need a different seat design. Seats, like people, come in many different shapes, sizes and resilience.

⚠**WARNING:** Some people claim that extended riding with a seat which is incorrectly adjusted or which does not support your pelvic area correctly can cause short-term or long-term injury to nerves and blood vessels, or even impotence. If your seat causes you pain, numbness or other discomfort, listen to your body and stop riding until you see your qualified bicycle mechanic or contact a BULLS representative.

⚠**WARNING:** When making seat angle adjustments, always check that the serrations on the mating surfaces of the clamp are not worn. Worn serrations on the clamp can allow the seat to move, causing you to lose control and fall.

Always tighten fasteners to the correct torque. Bolts that are too tight can stretch and deform. Bolts that are too loose can move and fatigue. Either mistake can lead to a sudden failure of the bolt, causing you to lose control and fall.

C. HANDLEBAR HEIGHT AND ANGLE

Maximum comfort is usually obtained when the handlebar height is equal to the height of the seat. You may wish to try different heights to find the most comfortable position.

If you want to adjust your handle bar:

Loose the stem bolts situated on the face plate, which is on the front side of the stem.

Turn the handlebars to the desired position and make sure the handlebar is centered.

Retighten alternately the stem bolts using a hex key. The bolts should be tightened only to the maximum torque (Nm) permitted in either the stem or handlebar. The maximum permitted torque should be printed on the stem and the handlebar. As a good rule of thumb, if you do not have a torque hex wrench, tighten the bolts alternately and equally, but not hard enough that the hex key leaves a clear imprint in the palm of your hand.

After adjusting the handlebar, you might have to readjust the brake and shift lever. Release the hex bolt at either grip binder. Turn the brake and shift the lever on the handlebar. Sit on the bike seat and place your fingers on the brake levers. Check whether the back of your hand forms a straight line with your lower arm. Retighten the levers. Check that all the levers on the handlebar are fixed to it. If not, gently retighten the clamping bolt(s) as necessary.

⚠**WARNING:** On some bicycles, changing the stem or stem height can affect the tension of the front brake cable, locking the front brake or creating excess cable slack, which can make the front brake inoperable. If the front brake pads move in towards the wheel rim or out away from the wheel rim when the stem or stem height is changed, the brakes must be correctly adjusted before you ride the bicycle. Some bicycles are equipped with an adjustable angle stem. If your bicycle has an adjustable angle stem, ask your local mechanic to show you how to adjust if. Do not attempt to make the adjustment yourself, as changing stem angles may also require adjustments to the bicycle's controls.

⚠**WARNING:** Always tighten fasteners to the correct torque. Bolts that are too tight

can stretch and deform. Bolts that are too loose can move and fatigue. Either mistake can lead to a sudden failure of the bolt, causing you to lose control and fall. Your local mechanic can also change the angle of the handlebar or bar end extensions.

⚠**WARNING:** An insufficiently tightened stem clamp bolt, handlebar clamp bolt or bar end extension clamping bolt may compromise steering action, which could cause you to lose control and fall. Place the front wheel of the bicycle between your legs and attempt to twist the handlebar/stem assembly. If you can twist the stem in relation to the front wheel, turn the handlebars in relation to the stem, or turn the bar end extensions in relation to the handlebar, the bolts are insufficiently tightened.

D. CONTROL POSITION ADJUSTMENTS

Although the angle of the brake and shift control levers have been pre-adjusted for your needs by our staff, their position on the handlebars can be changed.

If you choose to make your own control lever angle adjustment, be sure to retighten the clamp fasteners to the recommended torque (Appendix D or the manufacturer's instructions).

E. BRAKE REACH

If you have smaller hands or find it difficult to squeeze the brake levers, many bikes have brake levers that can be adjusted for reach.

Your BULLS breaks have been calibrated to your needs based in your profile. We do not recommend you adjust your brakes on your own, however, if you wish to recalibrate your break levers, this is how you can adjust the break levers in most brands:

1. MTB:
Most bicycles will have a screw either in the inside or the outside of the lever. Turn the screw to adjust the distance between the lever and the handlebar.

a. Adjusting from the outside of the lever (figure 6)
b. Adjusting from the inside of the lever (figure 7)

2. Road Bikes:
Most Road Bikes will have a screw inside the lever mechanism (figure 8) to regulate its distance.

⚠ **WARNING:** The shorter the brake lever reach, the more critical it is to have correctly adjusted brakes, so that the full braking power can be applied within the available brake lever travel. Brake lever travel that is insufficient to apply full braking power can result in loss of control, which may result in serious injury or death.

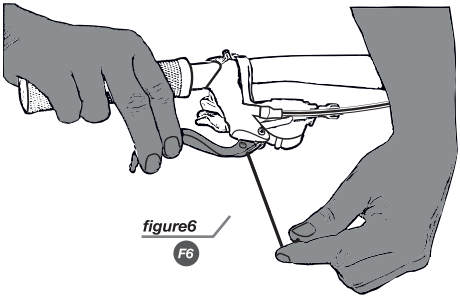

figure6
F6

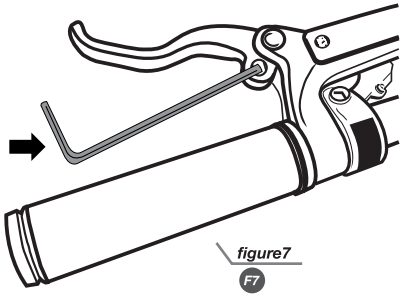

figure7
F7

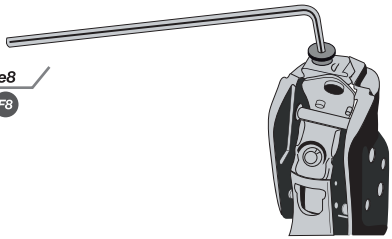

figure8
F8

5. TECH

It's important to your safety, performance and enjoyment to understand how things work on your bicycle. We urge you to ask your professional bicycle mechanic on how to do the things described in this section before you attempt them yourself, and that you have them check your work before you ride your BULLS. If you have even the slightest doubt as to whether you understand something in this section of the Manual, talk to or write an email to a BULLS representative. Please also refer Appendix A, B, C and D for additional information.

A. WHEELS

Bicycle wheels are designed to be removable for easier transportation and for repair of a tire puncture. In most cases, the wheel axles are inserted into slots, called "dropouts" in the fork and frame, but some suspension mountain bikes use what is called a "through axle" wheel mounting system.

If you have a mountain bike equipped with through axle front or rear wheels, make sure that you understand the manufacturer's instructions provided with your BULLS, and follow those when installing or removing a through axle wheel. If you don't know what a through axle wheel system is, please contact a BULLS representative.

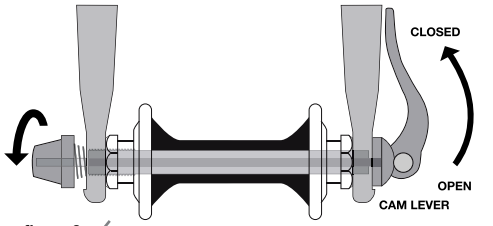

figure 9a
F9a

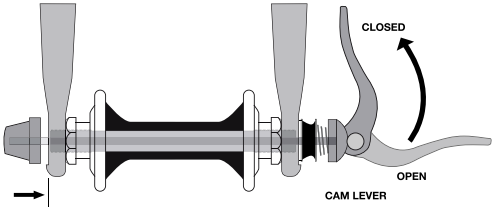

figure 9b
F9b

Wheels are secured in one of three ways:

A hollow axle with a shaft ("skewer") running through it which has an adjustable tension nut on one end and an over-center cam on the other (figures 9a and 9b):

A hollow axle with a shaft ("skewer") running through it which has a nut on one end and a fitting for a hex key, lock lever or other tightening device on the other (figure 10):

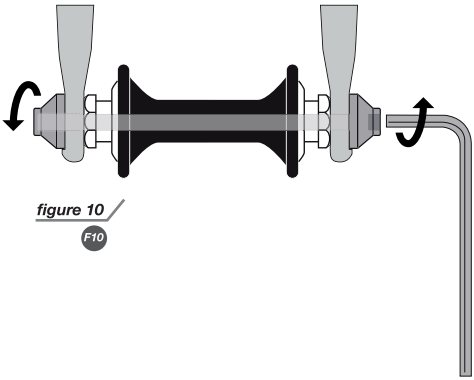

figure 10
F10

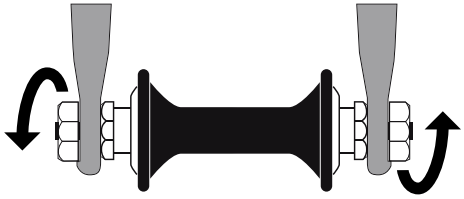

figure 11
F11

3. Hex nuts or hex key bolts which are threaded on to or into the hub axle (figure11):

These are the most common ways a wheel is secured with the axle. Your bicycle may be equipped with two different securing methods for the front wheel and the rear wheel.

⚠**WARNING:** It is very important that you understand the type of wheel securing method on your bicycle, that you know how to secure the wheels correctly, and that you know how to apply the correct clamping force that safely secures the wheel. Ask a BULLS representative to instruct you in correct wheel removal and installation if you are not familiar with these methods.

⚠**WARNING:** Riding with an improperly secured wheel can allow the wheel to wobble or fall off the bicycle, which can cause serious injury or death. Therefore, it is essential that you:

Ask a BULLS representative to help you make sure you know how to install and remove your wheels safely or check our FAQ at our website www.bullsbikesusa.com.

Understand and apply the correct technique for clamping your wheel in place.

Before each ride check that the wheel is securely clamped. The clamping action of a correctly secured wheel must emboss the surfaces of the dropouts.

1. Front Wheel Secondary Retention Devices

Most bicycles have front forks which utilize a secondary wheel retention device to reduce the risk of the wheel disengaging from the fork if the wheel is incorrectly secured. Secondary retention devices are not a substitute for correctly securing your front wheel.

Secondary retention devices fall into two basic categories:

1. The clip-on type that the manufacturer adds to the front wheel hub or front fork.
2. The integral type, which is molded, cast or machined into the outer faces of the front fork dropouts. Ask a BULLS representative to explain the particular secondary retention device on your bike.

⚠**WARNING**: Do not remove or disable the secondary retention device. As its name implies, it serves as a back-up for critical adjustment. If the wheel is not secured correctly, the secondary retention device can reduce the risk of a wheel disengaging from the fork. Removing or disabling the secondary retention device may also void the warranty. Secondary retention devices are not a substitute for correctly securing your wheel. Failure to properly secure the wheel can cause the wheel to wobble or disengage, which could cause you to loose control and fall, resulting in serious injury or death.

2. Wheels with cam action systems

There are currently two types of over-center cam wheel retention mechanisms: The traditional over-center cam (figure 9a) and the cam-and-cup system (figure 9b). Both use an over-center cam action to clamp the bike's wheel in place. Your bicycle may have a cam-and-cup front wheel retention system and a traditional rear wheel cam action system.

1. Adjusting the traditional cam action mechanism (figure 9a):
   The wheel hub is clamped in place by the force of the over-center cam pushing against one dropout and pulling the tension adjusting nut, by way of the skewer, against the other dropout. The amount of clamping force is controlled by the tension adjusting nut. Turning the tension adjusting nut clockwise while keeping the cam lever from rotating increases clamping force; turning it counterclockwise while keeping the cam lever from rotating reduces clamping force. Less than half a turn of the tension adjusting nut can make the difference between safe clamping force and unsafe clamping force.

⚠ **WARNING:** The full force of the cam action is needed to clamp the wheel se-

curely. Holding the nut with one hand and turning the lever like a wing nut with the other hand until everything is as tight as you can get it will not clamp a cam action wheel safely in the dropouts.

2. Adjusting the cam-and-cup mechanism (figure 9b):
   The cam-and-cup system on your front wheel should be c rrectly adjusted for your bicycle by your local mechanic. Ask your local mechanic to check the adjustment every six months. Do not use any other cam-and-cup front wheel on your bicycle other than the one adjusted specifically for it by your local mechanic.

3. Removing and Installing wheels

⚠ **WARNING:** If your bike is equipped with a hub brake such as a rear coaster brake, front or rear drum, band or roller brake; or if it has an internal gear rear hub, do not attempt to remove the wheel. The removal and re-installation of most hub brakes and internal gear hubs requires special knowledge. Incorrect removal or assembly can result in brake or gear failure, which can cause you to lose control and fall.

⚠**CAUTION:** If your bike has a disc brake, exercise care in touching the rotor or caliper. Disc rotors have sharp edges, and both rotor and caliper can become very hot during use.

Removing a disk brake or rim brake Front Wheel

a. If your bike has rim brakes, disengage the brake's quick-release mechanism to increase the clearance between the tire and the brake pads (See Section 5.C "Brakes")

b. If your bike has cam action front wheel retention, move the cam lever from the locked or CLOSED position to the OPEN position. If your bike has a through bolt or bolt-on front wheel retention, loosen the fastener(s) a few turns counter-clockwise using an appropriate wrench, lock key or the integral lever.

c. If your front fork has a clip-on type of secondary retention device, disengage it. If your front fork has an integral secondary retention device, and a traditional cam action system, loosen the tension adjusting nut enough to allow removing the wheel from the dropouts. If your front wheel uses a cam-and-cup system, squeeze the cup and cam lever together while removing the wheel. No rotation of any part is necessary with the cam-and-cup system.

You may need to tap the top of the wheel with the palm of your hand to release the wheel from the front fork.

2. Installing a disk brake or rim brake Front Wheel

⚠**CAUTION:** If your bike is equipped with a front disk brake, be careful not to damage the disk, caliper or brake pads when re-inserting the disk into the caliper. Never activate a disk brake's control lever unless the disk is correctly inserted in the caliper. See also Section 5.C "Brakes"

a. If your bike has cam action front wheel retention, move the cam lever so that it curves away from the wheel (figure 9b). This is the OPEN position. If your bike has a through bolt or bolt-on front wheel retention, go to the next step.

b. With the steering fork facing forward, insert the wheel between the fork blades so that the axle sits firmly at the top of the fork dropouts. The cam lever, if there is one, should be on the rider's left side of the bicycle (figure 9a and 9b). If your bike has a clip-on type secondary retention device, engage it.

c. If you have a traditional cam action mechanism: hold the cam lever in the ADJUST position with your right hand and tighten the tension adjusting nut with your left hand until it is finger tight against the fork dropout (figure 9a). If you have a cam-and-cup system: the nut and cup (figure 9b) will have snapped into the recessed area of the fork dropouts and no adjustment should be required.

d. Push the wheel firmly to the top of the slots in the fork dropouts, while centering the wheel rim in the fork:

   a. With a cam action system, move the cam lever upwards and swing it into the CLOSED position (figure 9a and 9b). The lever should now be parallel to the fork blade and curved towards the wheel. To apply enough clamping force, you should have to wrap your fingers around the fork blade for leverage, and the lever should leave a clear imprint in the palm of your hand.

   b. With a through-bolt or bolt-on system, tighten the fasteners to the torque specifications in Appendix D or the hub manufacturer's instructions.

      NOTE: If, on a traditional cam action system, the lever cannot be pushed all the way to a position parallel to the fork blade, return the lever to the OPEN position. Then turn the tension adjusting nut counterclockwise one-quarter turn and try tightening the lever again.

   c. With a through-bolt or bolt-on system, tighten the fasteners to the torque specifications in Appendix D or the hub

manufacturer's instructions.

⚠**WARNING:** Securely clamping the wheel with a cam action retention device takes considerable force. If you can fully close the cam lever without wrapping your fingers around the fork blade for leverage, the lever does not leave a clear imprint in the palm of your hand, and the serrations on the wheel fastener do not emboss the surfaces of the dropouts, the tension is insufficient. Open the lever; turn the tension adjusting nut clockwise a quarter turn; then try again.

e. If you disengaged the brake quick-release mechanism, re-engage it to restore correct brake pad-to-rim clearance.

f. Spin the wheel to make sure that it is centered in the frame and clears the brake pads; then squeeze the brake lever and make sure that the brakes are operating correctly.

3. Removing a disk brake or rim brake Rear Wheel

a. If you have a multi-speed bike with a derailleur gear system: shift the rear derailleur to high gear (the smallest, outermost rear sprocket). If you have an internal gear rear hub, consult a BULLS representative or the hub manufacturer's instructions before attempting to remove the rear wheel. If you have a single-speed bike with rim or disk brake, go to step (d) below.

b. If your bike has rim brakes, disengage the brake's quick-release mechanism to increase the clearance between the wheel rim and the brake pads (see Section 5.C "Brakes", figures. 12 through 16).

c. On a derailleur gear system, pull the derailleur body back with your right hand.

d. With a cam action mechanism, move the quick-release lever to the OPEN position (figure 9b). With a through bolt or bolt on mechanism, loosen the fastener(s) with an appropriate wrench, lock lever or integral lever; then push the wheel forward far enough to be able to remove the chain from the rear sprocket.

e. Lift the rear wheel off the ground a few inches and remove it from the rear dropouts.

4. Installing a disk brake or rim brake Rear Wheel

⚠ **CAUTION:** If your bike is equipped with a rear disk brake, be careful not to damage the disk, caliper or brake pads when

re-inserting the disk into the caliper. Never activate a disk brake's control lever unless the disk is correctly inserted in the caliper.

a. With a cam action system, move the cam lever to the OPEN position (see figures 9a and 9b). The lever should be on the side of the wheel opposite the derailleur and freewheel sprockets.

b. On a derailleur bike, make sure that the rear derailleur is still in its outermost, high gear, position; then pull the derailleur body back with your right hand. Put the chain on top of the smallest freewheel sprocket.

c. On single-speed, remove the chain from the front sprocket, so that you have plenty of slack in the chain. Put the chain on the rear wheel sprocket.

d. Then, insert the wheel into the frame dropouts and pull it all the way in to the dropouts.

e. On a single speed or an internal gear hub, replace the chain on the chainring; pull the wheel back in the dropouts so that it is straight in the frame and the chain has about 1/4 inches of up-and-down play.

f. With a cam action system, move the cam lever upwards and swing it into the CLOSED position (figures 9a and 9b). The lever should now be parallel to the seat stay or chain stay and curved toward the wheel. To apply enough clamping force, you should have to wrap your fingers around the fork blade for leverage, and the lever should leave a clear imprint in the palm of your hand.

g. With a through-bolt or bolt-on system, tighten the fasteners to the torque specifications in Appendix D or the hub manufacturer's instructions.

NOTE: If, on a traditional cam action system, the lever cannot be pushed all the way to a position parallel to the seat stay or chain stay, return the lever to the OPEN position. Then turn the tension adjusting nut counterclockwise one-quarter turn and try tightening the lever again.

⚠**WARNING:** Securely clamping the wheel with a cam action retention device takes considerable force. If you can fully close the cam lever without wrapping your fingers around the seat stay or chain stay for leverage, the lever does not leave a clear imprint in the palm of your hand, and the serrations on the wheel fastener do not emboss the surfaces of the dropouts, the tension is insufficient. Open the lever; turn the tension adjusting nut clockwise a quarter turn; then try again.

h. If you disengaged the brake quick-release mechanism in 3.b above, re-engage it to restore correct brake pad-to-rim clearance.

i. Spin the wheel to make sure that it is centered in the frame and clears the brake pads; then squeeze the brake lever and make sure that the brakes are operating correctly.

B. SEAT POST CAM ACTION CLAMP

Some bikes are equipped with a cam action seat post binder. The seat post cam action binder works exactly like the traditional wheel cam action fastener (Section 5.A.2 "Wheels with Cam Action Systems") While a cam action binder looks like a long bolt with a lever on one end and a nut on the other, the binder uses an over-center cam action to firmly clamp the seat post (see figure 9a).

⚠ **WARNING:** Riding with an improperly tightened seat post can allow the seat to turn or move and cause you to lose control and fall.

Make sure you read and understand the details on our webpage www.bullsbikesusa.com "Support, Technical Support," on how to correctly clamp your seat post.

⚠**WARNING:** If you don't understand how to correctly clamp your seat post, contact a BULLS representative or your local mechanic.

Understand and apply the correct technique for clamping your seat post.

Before you ride the bike, first check that the seat post is securely clamped.

Adjusting the seat post cam action mechanism.

The action of the cam squeezes the seat collar around the seat post to hold the seat post securely in place. The amount of clamping force is controlled by the tension adjusting nut. Turning the tension adjusting nut clockwise while keeping the cam lever from rotating increases clamping force; turning it counterclockwise while keeping the cam lever from rotating reduces clamping force. Less than half a turn of the tension adjusting nut can make the difference between safe and unsafe clamping force.

⚠ **WARNING**: The full force of the cam action is needed to clamp the seat post securely. Simply holding the nut with one hand and turning the lever like a wing nut with the other hand until everything is as tight as you can get it will not secure the seat post safely.

⚠ **WARNING:** If you can fully close the cam lever without wrapping your fingers around the seat post or a frame tube for leverage, and the lever does not leave a clear imprint in the palm of your hand, the tension is insufficient. Open the lever; turn the tension adjusting nut clockwise a quarter turn; then try again.

C. BRAKES

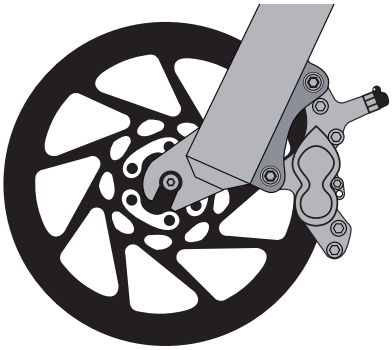

figure 12
F12

There are three general types of bicycle brakes: rim brakes, which operate by squeezing the wheel rim between two brake pads; disc brakes, which operate by squeezing a hub-mounted disc between two brake pads; and internal hub brakes. All three can be operated by way of a handlebar mounted lever. On some models of bicycle, the internal hub brake is operated by pedaling backwards. This is called a Coaster Brake and is described in Appendix C.

⚠WARNING:

Riding with improperly adjusted brakes, worn brake pads, or wheels on which the rim wear mark is visible is dangerous and can result in serious injury or death.

Applying brakes too hard or too suddenly can lock up a wheel, which could cause you to lose control and fall. Sudden or excessive application of the front brake may pitch the rider over the handlebars, which may result in serious injury or death.

Some bicycle brakes, such as disc brakes (figure 12) and linear-pull brakes (figure 13), are extremely powerful. Take extra care in becoming familiar with these brakes and exercise particular care when using them.

4. Some bicycle brakes are equipped with a brake force modulator, a small, cylindrical device through which the brake control cable runs and which is designed to provide a more progressive application of braking force. A modulator makes the initial brake lever force less forceful, progressively increasing force until full force is achieved. If your bike is equipped with a brake force modulator, take extra care in becoming familiar with its performance characteristics.

5. Disc brakes can get extremely hot with extended use. Be careful not to touch a disc brake until it has had plenty of time to cool.

6. See the brake manufacturer's instructions on the operation and care of your brakes, and for when brake pads must be replaced. If you do not have the manufacturer's instructions, see your local mechanic or contact the brake manufacturer.

7. If replacing worn or damaged parts, use only manufacturer-approved genuine replacement parts.

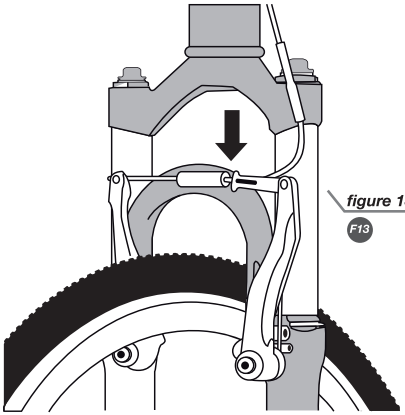

figure 13

F13

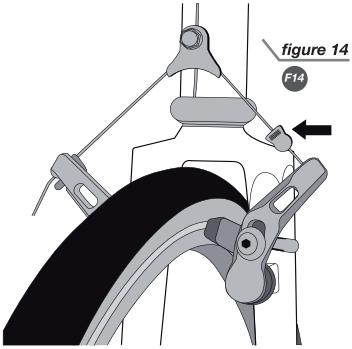
figure 14
F14

1. Brake controls and features

It is very important for your safety that you learn and remember which brake lever controls which brake on your bike. Traditionally, the right brake lever controls the rear brake and the left brake lever controls the front brake; but, to make sure your bike's brakes are set up this way, squeeze one brake lever and look to see which brake, front or rear, engages. Now do the same with the other brake lever.

Make sure that your hands can reach and squeeze the brake levers comfortably. If your hands are too small to operate the levers comfortably, consult your local mechanic before riding the bike. The lever reach may be adjustable; or you may need a different brake lever design.

Most rim brakes have some form of quick-release mechanism that allows the brake pads to clear the tire when a wheel is removed or reinstalled. When the brake quick release is in the open position, the brakes are inoperative. Ask your local mechanic to make sure that you understand the way the brake quick release works on your bike (see figures 13, 14, 15 and 16) and check each time to make sure both brakes work correctly before you get on the bike.

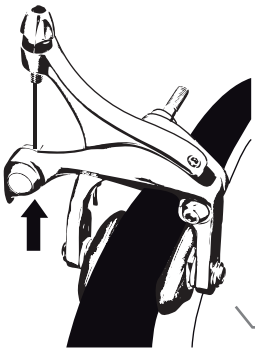
figure 15
F15

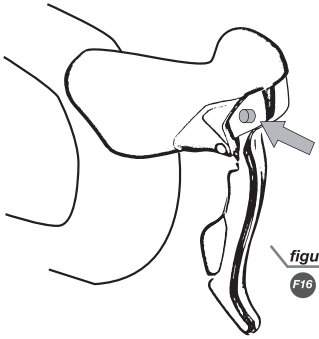
figure 16
F16

2. How brakes work

The braking action of a bicycle is a function of the friction between the braking surfaces. To make sure that you have maximum friction available, keep your wheel rims and brake pads or the disk rotor and caliper clean and free of dirt, lubricants, waxes or polishes.

Brakes are designed to control your speed, not just to stop the bike. Maximum braking force for each wheel occurs at the point just before the wheel "locks up" (stops rotating) and starts to skid. Once the tire skids, you actually lose most of your stopping force and all directional control. You need to practice slowing and stopping smoothly without locking up a wheel. The technique is called progressive brake modulation. Instead of jerking the brake lever to the position where you think you'll generate appropriate braking force, squeeze the lever, progressively increasing the braking force. If you feel the wheel begin to lock up, release a little pressure to keep the wheel rotating just short of lockup. It's important to develop a feel for the amount of brake lever pressure required for each wheel at different speeds and on different surfaces. To better understand this, experiment a little by walking your bike and applying different amounts of pressure to each brake lever, until the wheel locks.

When you apply one or both brakes, the bike begins to slow, but your body wants to continue at the speed at which it was going. This causes a transfer of weight to the front wheel (or, under heavy braking, around the front wheel hub, which could send you flying over the handlebars).

A wheel with more weight on it will accept greater brake pressure before lockup; a wheel with less weight will lock up with less brake pressure. So, as you apply brakes and your weight is transferred forward, you need to shift your body toward the rear of the bike, to transfer weight back on to the rear wheel; and at the same time, you need to both decrease rear braking and increase front braking force. This is even more important on descents, because descents shift weight forward.

Two keys to effective speed control and safe stopping are controlling wheel lockup and weight transfer. This weight transfer is even more pronounced if your bike has a front suspension fork. Front suspension "dips" under braking, increasing the weight transfer (see also Section 4.F). Practice braking and weight transfer techniques where there is no traffic or other hazards and distractions.

Everything changes when you ride on loose surfaces or in wet weather. It will take longer to stop on loose surfaces or in wet weather. Tire adhesion is reduced, so the wheels have less cornering and braking traction and can lock up with less brake force. Moisture or dirt on the brake pads reduces their ability to grip. The only way to maintain control on loose or wet surfaces is to reduce speed.

D. SHIFTING GEARS

Your multi-speed bicycle will have a derailleur drivetrain (see 1. below), an internal gear hub drivetrain (see 2. below) or, in some special cases, a combination of the two.

1. How a derailleur drivetrain works

If your bicycle has a derailleur drivetrain, the gear-changing mechanism will have:

- A rear cassette or freewheel sprocket cluster
- A rear derailleur
- Usually a front derailleur
- One or two shifters
- One, two or three front sprockets called chainrings
- A drive chain

a. Shifting Gears

There are several different types and styles of shifting controls: levers, twist grips, triggers, combination shift/brake controls and push-buttons. Ask a BULLS representative to explain the type of shifting controls that are on your bike, and to show you how they work.

The vocabulary of shifting can be pretty confusing. A downshift is a shift to a "lower" or "slower" gear, on which it is easier to pedal. An upshift is a shift to a "higher" or "faster", harder to pedal gear. What maybe confusing is that what's happening at the front derailleur is the opposite of what's happening at the rear derailleur. (For details, read the instructions on Shifting the Rear Derailleur and Shifting the Front Derailleur below.)

You can select a gear which will make pedaling easier on a hill (make a downshift) in one of two ways: shift the chain down the gear "steps" to a smaller gear at the front, or up the gear "steps" to a larger gear at the rear. So, at the rear gear cluster, what is called a downshift looks like an upshift. The way to keep things straight is to remember that shifting the chain in towards the centerline of the bike is for accelerating and climbing and is called a downshift. Moving the chain out or away from the centerline of the bike is for speed and is called an upshift.

Whether upshifting or downshifting, the bicycle derailleur system design requires that the drive chain be moving forward and be under at least some tension. A derailleur will shift only if you are pedaling forward.

⚠**CAUTION:** Never move the shifter while pedaling backward. Also refrain from pedaling backwards immediately after

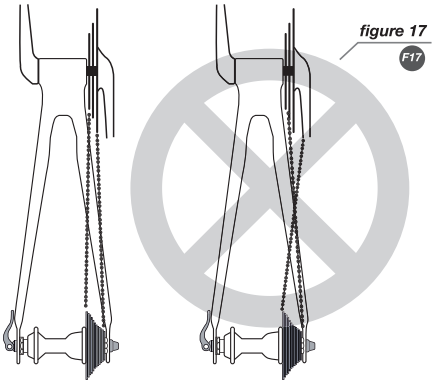

figure 17

having moved the shifter. This could jam the chain and cause serious damage to the bicycle.

b. Shifting the Rear Derailleur

The rear derailleur is controlled by the right shifter.

The function of the rear derailleur is to move the drive chain from one gear sprocket to another. The smaller sprockets on the gear cluster produce higher gear ratios. Pedaling in the higher gears requires greater pedaling effort, but takes you a greater distance with each revolution of the pedal cranks. The larger sprockets produce lower gear ratios. Using them requires less pedaling effort, but takes you a shorter distance with each pedal crank revolution. Moving the chain from a smaller sprocket of the gear cluster to a larger sprocket results in a downshift. Moving the chain from a larger sprocket to a smaller sprocket results in an upshift. In order for the derailleur to move the chain from one sprocket to another, the rider must be pedaling forward.

c. Shifting the Front Derailleur:

The front derailleur, which is controlled by the left shifter, shifts the chain between the larger and smaller chainrings. Shifting the chain onto a smaller chainring makes pedaling easier (a downshift). Shifting to a larger chainring makes pedaling harder (an upshift).

d. Which gear should I be in?

The combination of largest rear and smallest front gears (figure17) is for the steepest hills. The smallest rear and largest front combination is for the greatest speed. It is not necessary to shift gears in sequence. Instead, find the "starting gear" which is right for your level of ability — a gear which is hard enough for quick acceleration but easy enough to let you start from a stop without wobbling — and experiment with upshifting and downshifting to get a feel for the different gear combinations.

Until you've built up your confidence, practice shifting where there are no obstacles, hazards or other traffic. Learn to anticipate the need to shift, and shift to a lower gear before the hill gets too steep. If you have difficulties with shifting, the problem could be mechanical adjustment. See your local mechanic for help.

⚠ **WARNING**: Never shift a derailleur onto the largest or the smallest sprocket if the derailleur is not shifting smoothly. The derailleur may be out of adjustment and the chain could jam, causing you to lose control and fall.

e. What if it won't shift gears?

If moving the shift control one click repeatedly fails to result in a smooth shift to the next gear chances are that the mechanism is out of adjustment. Take the bike to your local mechanic to have it adjusted.

2. How an internal gear hub drivetrain works

If your bicycle has an internal gear hub drivetrain, the gear changing mechanism will consist of:

A 3, 5, 7, 8, 12 speed or possibly an infinitely variable internal gear hub
One, or sometimes two shifters
One or two control cables
One front sprocket called a chainring
A drive chain

a. Shifting internal gear hub gears

Shifting with an internal gear hub drivetrain is simply a matter of moving the shifter to the indicated position for the desired gear ratio. After you have moved the shifter to the gear position of your choice, ease the pressure on the pedals for a moment to allow the hub to complete the shift.

b. Which gear should I be in?

The numerically lowest gear (1) is for the steepest hills. The numerically largest gear is for the greatest speed.

Shifting from an easier, "slower" gear (like 1) to a harder, "faster" gear (like 2 or 3) is called an upshift. Shifting from a harder, "faster" gear to an easier, "slower" gear is called a downshift. It is not necessary to shift gears in sequence. Instead, find the "starting gear" for the conditions you are riding in— a gear which is hard enough for quick acceleration but easy enough to let you start from a stop without wobbling — and experiment with upshifting and downshifting to get a feel for the different gears. At first, practice shifting where there are no obstacles, hazards or other traffic, until you've built up confidence. Learn to anticipate the need to shift, and shift to a lower gear before the hill gets too steep. If you have difficulties with shifting, the problem could be mechanical adjustment. Contact a BULLS representative if you need any help with this.

c. What if it won't shift gears?

If moving the shift control one click repeatedly fails to result in a smooth shift to the next gear, chances are that the mechanism is out of adjustment. Take the bike to your local mechanic to have it adjusted

E. PEDALS

1. Toe Overlap is when your toe can touch the front wheel when you turn the handlebars to steer while a pedal is in the forward most position. This is common on small-framed bicycles, and is avoided by keeping the inside pedal up and the outside pedal down when making sharp turns. On any bicycle, this technique will also prevent the inside pedal from striking the ground in a turn.

⚠ **WARNING:** Toe Overlap could cause you to lose control and fall. Ask your local mechanic to help you determine if the combination of frame size, crank arm length, pedal design and shoes used, will result in pedal overlap. Whether or not you have overlap, you must keep the inside pedal up and the outside pedal down when making sharp turns.

2. Some bicycles come equipped with pedals that have sharp and potentially dangerous surfaces. These surfaces are designed to add safety by increasing the grip between the rider's shoe and the pedal. If your bicycle has this type of high-performance pedal, you must take extra care to avoid serious injury from the pedals' sharp surfaces. Based on your riding style or skill level, you may prefer a less aggressive pedal design, or chose to ride with shin pads. Your local mechanic can show you a number of options and make suitable recommendations.

3. Toeclips and straps are a means to keep feet correctly positioned and engaged with the pedals. The toeclip positions the ball of the foot over the pedal spindle, which gives maximum pedaling power. The toe strap, when tightened, keeps the foot engaged throughout the rotation cycle of the pedal. While toeclips and straps give some benefit with any kind of shoe, they work most effectively with cycling shoes designed for use with toeclips. A BULLS representative can explain how toeclips and straps work. Shoes with deeply treaded soles or welts, which might make it more difficult for you to insert or remove your foot, should not be used with toeclips and straps.

⚠**WARNING:** Getting into and out of pedals with toeclips and straps requires skill which can only be acquired with practice. Until this becomes a reflex action, the technique requires concentration that can distract your attention and cause you to lose control and fall. Practice the use of toeclips and straps where there are no obstacles, hazards or traffic. Keep the straps loose, and don't tighten them until your technique and confidence in getting in and out of the pedals warrants it. Never ride in traffic with your toe straps too tight.

4. Clipless pedals (sometimes called "step-in pedals") are another means to keep feet securely in the correct position

for maximum pedaling efficiency. They have a plate, called a "cleat," on the sole of the shoe, which clicks into a mating spring-loaded fixture on the pedal. They only engage or disengage with a very specific motion that must be practiced until it becomes instinctive. Clipless pedals require shoes and cleats that are compatible with the make and model of the pedal being used.

Many clipless pedals are designed to allow the rider to adjust the amount of force needed to engage or disengage the foot. Follow the pedal manufacturer's instructions, or check in our website www.bullsbikesusa.com how to make this adjustment. Use the easiest setting until engaging and disengaging becomes a reflex action, but always make sure that there is sufficient tension to prevent unintended release of your foot from the pedal.

⚠**WARNING:** Clipless pedals are intended for use with shoes specifically made to fit them and are designed to firmly keep the foot engaged with the pedal. Do not use shoes that do not engage the pedals correctly.

Practice is required to learn to engage and disengage the foot safely. Until engaging and disengaging the foot becomes a reflex action, the technique requires concentration which can distract your attention and cause you to lose control and fall. Practice engaging and disengaging clipless pedals in a place where there are no obstacles, hazards or traffic; and be sure to follow the pedal manufacturer's setup and service instructions. If you do not have the manufacturer's instructions, contact a BULLS representative to help you with this.

F. BICYCLE SUSPENSION

Many bicycles are equipped with suspension systems. There are many different types of suspension systems — virtually too many to detail individually in this Manual. If your bicycle has a suspension system of any kind, be sure to read and follow the suspension manufacturer's setup and service instructions. If you do not have the manufacturer's instructions, contact a BULLS representative or contact the manufacturer.

⚠**WARNING:** Failure to maintain, check and properly adjust the suspension system may result in suspension malfunction, which may cause you to lose control and fall.

If your bike has suspension, the increased speed you may develop also increases your risk of injury. For example, when braking, the front of a suspended bike dips. You could lose control and fall if you do

not have experience with this system. Learn to handle your suspension system safely. See also Section
5.C. "Brakes"

⚠**WARNING:** Changing the suspension adjustment can change the handling and braking characteristics of your bicycle. Never change the suspension adjustment unless you are thoroughly familiar with the suspension system manufacturer's instructions and recommendations. Always check for changes in the handling and braking characteristics of the bicycle after a suspension adjustment by taking a careful test ride in a hazard-free area.

Suspension can increase control and comfort by allowing the wheels to better follow the terrain. This enhanced capability may allow you to ride faster; but you must not confuse the enhanced capabilities of the bicycle with your own capabilities as a rider. Increasing your skill will take time and practice. Proceed carefully until you have learned to handle the full capabilities of your bike.

⚠ **WARNING:** Not all bicycles can be safely retrofitted with some types of suspension systems. Before retrofitting a bicycle with any suspension, check with the bicycle's manufacturer to make sure that what you want to do is compatible with the bicycle's design. Failing to do so can result in catastrophic frame failure.

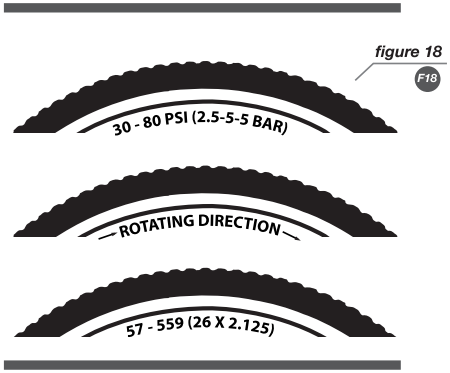

figure 18
F18

G. TIRES AND TUBES

1. Tires

Bicycle tires are available in many designs and specifications, ranging from general-purpose designs to tires designed to perform best under very specific weather or terrain conditions. Once you've gained experience with your new bike, you may feel that a different tire might better suit your riding needs.

The size, pressure rating (and on some high-performance tires, the specific recommended use) are marked on the sidewall of the tire (see figure 18). The information that is most valuable to you is Tire Pressure.

⚠**WARNING:** Never inflate a tire beyond the maximum pressure marked on the tire's sidewall. Exceeding the recommended maximum pressure may blow the tire off the rim, which could cause damage to the bike and injury to the rider and bystanders.

The best and safest way to inflate a bicycle tire to the correct pressure is with a bicycle pump equipped with a built-in pressure gauge.

⚠**WARNING:** There is a safety risk in using gas station air hoses or other air compressors. They are not made for bicycle tires. They move a large volume of air very rapidly, and will raise the pressure in your tire very rapidly, which could cause the tube to explode.

Tire pressure is given either as maximum pressure or as a pressure range. How a tire performs under different terrain or weather conditions depends largely on tire pressure. Inflating the tire to nearly its maximum recommended pressure gives the lowest rolling resistance; but also produces the harshest ride. High pressures work best on smooth, dry pavement.

Very low pressures, at the bottom of the recommended pressure range, gives the best performance on smooth, slick terrain such as hard-packed clay, and on deep, loose surfaces such as deep, dry sand.
Tire pressure that is too low for your weight and the riding conditions can cause a puncture in the tube by allowing the tire to deform sufficiently enough to pinch the inner tube between the rim and the riding surface.

⚠**CAUTION:** Pencil type automotive tire gauges can be inaccurate and should not be relied upon for consistent, accurate pressure readings. Instead, use a high quality dial gauge.

Ask a BULLS representative about the best tire pressure for the kind of riding you will most often do, and have your local mechanic inflate your tires to that pressure. Then, check inflation as described in Section 2.C "Mechanical Safety Check" so you'll know how correctly inflated tires should look and feel when you don't have access to a gauge. Some tires may need to be brought up to pressure every week or two, so it is important to check your tire pressures before every ride.

Some special high-performance tires have unidirectional treads: their tread pattern is designed to work better in one direction than in the other. The sidewall marking of an unidirectional tire will have an arrow showing the correct rotation direction. If your bike has unidirectional tires, be sure that they are mounted to rotate in the correct direction.

2. Tire Valves

There are primarily two kinds of bicycle tube valves: The Schraeder Valve and the

Presta Valve. The bicycle pump you use must have the fitting appropriate to the valve stems on your bicycle.

The Schraeder valve (figure 19a) is like the valve on a car tire. To inflate a Schraeder valve tube, remove the valve cap and clamp the pump fitting onto the end of the valve stem. To let air out of a Schraeder valve, depress the pin in the end of the valve stem with the end of a key or other appropriate object.

The Presta valve (figure 19b) has a narrower diameter and is only found on bicycle tires. To inflate a Presta valve tube using a Presta headed bicycle pump, remove the valve cap; unscrew (counterclockwise) the valve stem lock nut; and push down on the valve stem to free it up. Then push the pump head on to the valve head, and inflate. To inflate a Presta valve with a Schraeder pump fitting, you'll need a Presta adapter, which screws on to the valve stem once you've freed up the valve. The adapter fits into the Schraeder pump fitting. Close the valve after inflation. To let air out of a Presta valve, open up the valve stem lock nut and depress the valve stem.

⚠**WARNING:** We highly recommend that you carry a spare inner tube when you ride your bike. Patching a tube is an emergency repair. If you do not apply the patch correctly or apply several patches, the tube can fail, resulting in possible tube failure, which could cause you to loose control and fall. Replace a patched tube as soon as possible.

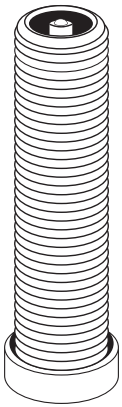

figure 19a

F19a

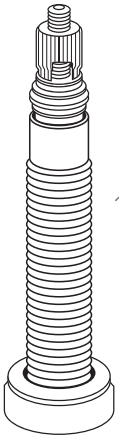

figure 19b

F19b

6.SERVICE

⚠**WARNING:** Technological advances have made bicycles and bicycle components more complex, and the pace of innovation is increasing. It is impossible for this manual to provide all the information required to properly repair and/or maintain your bicycle. In order to help minimize the chances of an accident and possible injury, it is critical that you should have any repair or maintenance that is not specifically described in this manual, performed by your local mechanic. Equally important is that your individual maintenance requirements needs to be determined by everything from your riding style to geographic location. Consult your local mechanic for help in determining your maintenance requirements.

⚠**WARNING:** Many bicycle service and repair tasks require special knowledge and tools. Do not begin any adjustments or service on your bicycle until you have learned from your local mechanic how to properly complete them. Improper adjustment or service may result in damage to the bicycle or in an accident which can cause serious injury or death.

If you want to learn to do major service and repair work on your bike:

Contact the component manufacturer for a copy of the installation and service instructions for the components on your bike.

Ask a Bulls representative to recommend a book on bicycle repair.

Ask your local mechanic about the availability of bicycle repair courses in your area.

We recommend that you ask your local mechanic to check the quality of your work the first time you work on something and before you ride the bike, to ensure that you did everything correctly. There may be a modest charge for this service.

We also recommend that you ask your local mechanic for guidance on what spare parts, such as inner tubes, light bulbs, etc. it would be appropriate for you to have once you have learned how to replace such parts.

A. SERVICE INTERVALS

Some service and maintenance can and should be performed by the owner, and require no special tools or knowledge beyond what is presented in this manual.

The following are examples of the type of service you should perform yourself. All other service, maintenance and repair should be performed in a properly equipped facility by a qualified bicycle mecha-

nic using the correct tools and procedures specified by the manufacturer.

Break-in Period: Your bike will last longer and work better if you inspect it before riding it hard. Control cables and wheel spokes may stretch or "seat" when a new bike is first used and may require readjustment by your local mechanic. Your Mechanical Safety Check (Section 2.C) will help you identify some things that need readjustment. But even if everything seems fine to you, it's best to take your bike back to your local mechanic for a checkup. Mechanics typically suggest you bring the bike in for a 30-day checkup. Another way to judge when it's time for the first checkup is to bring the bike in after three to five hours of hard off-road use, or about 10 to 15 hours of on-road or more casual off-road use. But if you think something is wrong with the bike, take it to your local mechanic before riding it again.

Before every ride: Mechanical Safety Check (Section 2.C)

After every long or hard ride; if the bike has been exposed to water or grit; or at least every 100 miles: Clean the bike and lightly lubricate the chain's rollers with a quality bicycle chain lubricant. Wipe off excess lubricant with a lint free cloth. Lubrication is a function of climate. Talk to a BULLS representative about the best lubricants and the recommended lubrication frequency for your area.

After every long or hard ride or after every 10 to 20 hours of riding:

Squeeze the front brake and rock the bike forward and back. Does everything feel solid? If you feel a clunk with each forward or backward movement of the bike, you probably have a loose headset. Have your local mechanic check it.

Lift the front wheel off the ground and swing it from side to side. Does it move smoothly? If you feel any binding or roughness in the steering, you may have a tight headset. Have your local mechanic check it.

Grab one pedal and rock it toward and away from the centerline of the bike; then do the same with the other pedal. Does anything feel loose? If so, have your local mechanic check it.

Take a look at the brake pads. Do they look worn or do they no longer hit the wheel rim squarely? If that is the case, it's time to have your local mechanic adjust or replace them.

Carefully check the control cables and cable housings. Any rust?

Kinks? Fraying? If so, have your local mechanic replace them.

Squeeze each adjoining pair of spokes on either side of each wheel between your thumb and index finger. Do they all feel about the same? If any feel loose, have your local mechanic check the wheel for tension and trueness.

Check the tires for excess wear, cuts or bruises. Have your local mechanic replace them if necessary.

Check the wheel rims for excess wear, dings, dents and scratches. Consult your local mechanic if you see any rim damage.

Check to make sure that all parts and accessories are still secure, and tighten any which are not.

Check the frame, particularly in the area around all tube joints; the handlebars; the stem; and the seatpost for any deep scratches, cracks or discoloration. These are signs of stress-caused fatigue and indicate that a part is at the end of its useful life and needs to be replaced. See also Appendix B.

⚠**WARNING:** Like any mechanical device, a bicycle and its components are subject to wear and stress. Different materials and mechanisms wear or fatigue from stress at different rates and have different life cycles. If a component's life cycle is exceeded, the component can suddenly and catastrophically fail, causing serious injury or death to the rider. Scratches, cracks, fraying and discoloration are signs of stress-caused fatigue and indicate that a part is at the end of its useful life and needs to be replaced. While the materials and workmanship of your bicycle or of individual components may be covered by a warranty for a specified period of time by the manufacturer, this is no guarantee that the product will last the term of the warranty. Product life is often related to the kind of riding you do and to the treatment to which you submit the bicycle. The bicycle's warranty is not meant to suggest that the bicycle cannot be broken or will last forever. It only means that the bicycle is covered subject to the terms of the warranty. Please be sure to read Appendix A, Intended Use of your bicycle and Appendix B, The lifespan of your bike and its components.

5. As required: If either of the brake levers fails the Mechanical Safety Check (Section 2.C), don't ride the bike. Have your local mechanic check the brakes. If the chain won't shift smoothly and quietly from gear to gear, the derailleur is out of adjustment. See your local mechanic.
6. Every 25 (hard off-road) to 50 (on-road) hours of riding: Take your bike to your local mechanic for a complete checkup.

B. IF YOUR BICYCLE SUSTAINS AN IMPACT

First, check yourself for injuries, and administer any first aid required. Seek medical help if necessary.

Next, check your bike for damage.

After any crash, take your bike to your local mechanic for a thorough check. Carbon composite components, including fames, wheels, handlebars, stems, cranksets, brakes, etc. which have sustained an impact must not be ridden until they have been disassembled and thoroughly inspected by a qualified mechanic.

See also Appendix B, Lifespan of your bike and its components.

⚠**WARNING:** A crash or other impact can put extraordinary stress on bicycle components, causing them to fatigue prematurely. Components suffering from stress fatigue can fail suddenly and catastrophically, causing loss of control, serious injury or death.

APPENDIX A

INTENDED USE OF YOUR BICYCLE

⚠**WARNING**: Understand your bike and its intended use. Choosing the wrong bicycle for your purpose can be hazardous. Using your bike the wrong way is dangerous.

There is no one type of bicycle that is suited for all purposes. There are many types of bicycles and many variations within each type. There are many types of mountain, road, racing, hybrid, touring, cyclocross and tandem bicycles.

There are also bicycles that mix features. For example, there are road/racing bikes with triple cranks. These bikes have the low gearing of a touring bike, the quick handling of a racing bike, but are not well suited for carrying heavy loads on a tour. For that purpose you want a touring bike. Each type of bicycle, optimizes certain, specific purposes.

On the following pages, we generally outline the intended uses of various types of bikes.

Industry usage conditions are generalized and evolving. Consult a BULLS representative about how you intend to use your bike.

High-Performance Road

CONDITION 1

Bikes designed for riding on a paved surface where the tires do not lose ground contact.

INTENDED To be ridden on paved roads only.

NOT INTENDED For off-road, cyclocross, or touring with racks or panniers.

TRADE OFF Material use is optimized to deliver both light weight and specific performance. You must understand that (1) these types of bikes are intended to give an aggressive racer or competitive cyclist a performance advantage over a relatively short product life, (2) a less aggressive ri-

der will enjoy longer frame life, (3) you are choosing light weight (shorter frame life) over more frame weight and a longer frame life, (4) you are choosing light weight over more dent resistant or rugged frames which weigh more. All frames that are very light need frequent inspection. These frames are likely to be damaged or broken in a crash. They are not designed to take abuse or be a rugged workhorse. See also Appendix B.

MAXIMUM WEIGHT LIMIT

RIDER	LUGGAGE*	TOTAL
lbs / kg	lbs / kg	lbs / kg
275 / 125	10 / 4.5	285 / 129

* Seat Bag /Handlebar Bag Only

General Purpose Riding
CONDITION 2

Bikes designed for riding Condition 1, plus smooth gravel roads and improved trails with moderate grades where the tires do not lose ground contact.

INTENDED For paved roads, gravel or dirt roads that are in good condition, and bike paths.
NOT INTENDED For off-road or mountain bike use, or for any kind of jumping. Some of these bikes have suspension features, but these features are designed to add comfort, not off-road capability.
Some come with relatively wide tires that are well suited to gravel or dirt paths.
Some come with relatively narrow tires that are best suited for faster riding on pavement. If you ride on gravel or dirt paths, carry heavier loads or want more tire durability talk to your local mechanic about wider tires.

MAXIMUM WEIGHT LIMIT

RIDER	LUGGAGE	TOTAL
lbs / kg	lbs / kg	lbs / kg
285 / 129	30 / 14	300 / 136
For Touring or Trekking		
300 /136	55 / 25	355 / 161

Cross-Country, Marathon, Hardtails

CONDITION 3

Bikes designed for riding Conditions 1 and 2, plus rough trails, small obstacles, and smooth technical areas, including areas where momentary loss of tire contact with the ground may occur. NOT jumping. All mountain bikes without rear suspension are Condition 3, as are some lightweight rear suspension models.

INTENDED For cross-country riding and racing which ranges from mild to aggressive riding over intermediate terrain. (E.g., hilly with small obstacles like roots, rocks, loose surfaces, hard pack and depressions.) Cross-country and marathon equipment (tires, shocks, frames, drive trains) are of light-weight construction, favoring nimble speed over brute force. Suspension travel is relatively short since the bike is intended to move quickly on the ground.

NOT INTENDED For Hardcore Freeriding, Extreme Downhill, Dirt Jumping, Slopestyle, or very aggressive or extreme riding. Not suitable for air time, hard landings or for hammering through obstacles.

TRADE OFF Cross-Country bikes are lighter, faster for uphill riding, and more nimble than All-Mountain bikes. Cross-Country and Marathon bikes trade off some ruggedness for pedaling efficiency and uphill speed.

MAXIMUM WEIGHT LIMIT

RIDER	LUGGAGE	TOTAL
lbs / kg	lbs / kg	lbs / kg
300 / 136	5 / 2.3	305 / 138
Front suspension frames manufactured with original equipment seat stay and dropout rack mounts only.		
300 /136	55 / 25	355 / 161

All Mountain

CONDITION 4

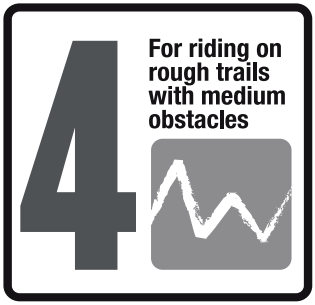

Bikes designed for riding Conditions 1, 2, and 3, plus rough technical areas, moderately sized obstacles, and small jumps.

INTENDED For trail and uphill riding. All-Mountain bicycles are:

(1) more heavy duty than cross country bikes, but less heavy duty than Freeride bikes,

(2) lighter and more nimble than Freeride bikes,

(3) heavier and have more suspension travel than a cross country bike, allowing them to be ridden in more difficult terrain, over larger obstacles and moderate jumps,

(4) intermediate in suspension travel and use components that fit the intermediate intended use,

(5) cover a fairly wide range of intended use, but even within this range the models differ in their level of heavy duty usage and construction.

NOT INTENDED For use in extreme forms of jumping/riding such as hardcore mountain, Freeriding, Downhill, North Shore, Dirt Jumping, Hucking etc. Not suitable for riding off large drop offs, jumps or launches (wooden structures, dirt embankments) requiring long suspension travel or heavy duty components; and not suitable for spending time in the air, hard landings or hammering through obstacles.

TRADE OFF All-Mountain bikes are more rugged than cross country bikes and are made for riding more difficult terrain. All-Mountain bikes are heavier and harder to ride uphill than cross country bikes. All-Mountain bikes are lighter, more nimble and easier to ride uphill than Freeride bikes. All-Mountain bikes are not as rugged as Freeride bikes and must not be used for more extreme riding and terrain.

MAXIMUM WEIGHT LIMIT

RIDER	LUGGAGE*	TOTAL
lbs / kg	lbs / kg	lbs / kg
300 / 136	5 / 2.3	305 / 138

*** Seat Bag Only**

Gravity, Freeride, and Downhill

CONDITION 5

Condition 5 bikes are designed for jumping, hucking, riding at high speeds, aggressive riding on rougher surfaces, and landing on flat surfaces. However, this type of riding is extremely hazardous and puts unpredictable force on a bicycle that could overload the frame, fork, or parts. If you choose to ride on Condition 5 terrain, you should take appropriate safety precautions such as, more frequent bike inspections and regular replacement of equipment. You should also wear comprehensive safety equipment such as a full-face helmet, pads, and body armor.

INTENDED For riding that includes the most difficult terrain that only the very skilled riders should attempt.

Gravity, Freeride, and Downhill are terms which describe hardcore mountain and, slopestyle. These are all forms of "extreme" riding and the terms describing these activities are constantly evolving.

Gravity, Freeride, and Downhill bikes are: (1) heavier and have more suspension travel than All-Mountain bikes, allowing them to be ridden in more difficult terrain, over larger obstacles and larger jumps, (2) they also have the longest suspension travel and use components that are intended for heavy duty use.

While all this is true, there is no guarantee that extreme riding will not break a Freeride bike.

The terrain and type of riding that Freeride bikes are designed for is inherently dangerous. Appropriate equipment, such as a Freeride bike, does not change this reality. In this kind of riding, bad judgment, bad luck, or riding beyond your capabilities can easily result in an accident, where you could be seriously injured, paralyzed or killed.

NOT INTENDED To be a reason or justification to try any kind of extreme, dangerous riding. Read Section 3. F "Extreme, Stunt or Competition Riding"

TRADE OFF Freeride bikes are more rugged than All-Mountain bikes, for riding in more difficult terrain. Freeride bikes are heavier and harder to ride uphill than All-Mountain bikes.

MAXIMUM WEIGHT LIMIT

RIDER	LUGGAGE*	TOTAL
lbs / kg	lbs / kg	lbs / kg
300 / 136	5 / 2.3	305 / 138

*** Seat Bag Only**

Dirt Jump

CONDITION 5

Condition 5 Bikes are designed for jumping, hucking, high speeds, or aggressive riding on rougher surfaces, or landing on flat surfaces. However, this type of riding is extremely hazardous and puts unpredictable forces on a bicycle that could overload the frame, fork, or other parts. If you choose to ride in

Condition 5 terrain, you should take appropriate safety precautions such as more frequent bike inspections and regular replacement of equipment. You should also wear comprehensive safety equipment such as a full-face helmet, pads, and body armor.

INTENDED For man-made dirt jumps, ramps, skate parks and other predictable obstacles and terrain where riders need and use skill and bike control, rather than suspension. Dirt Jumping bikes are used much like heavy-duty BMX bikes. A Dirt Jumping bike does not give you skills to jump. Read Section 3. F "Extreme, Stunt or Competition Riding."

NOT INTENDED For terrain, drop offs or landings where large amounts of suspension travel are needed to help absorb the shock of landing and maintaining control.

TRADE OFF Dirt Jumping bikes are lighter and more nimble than Freeride bikes, but they have no rear suspension and the suspension travel in the front is much shorter.

MAXIMUM WEIGHT LIMIT

RIDER	LUGGAGE	TOTAL
lbs / kg	lbs / kg	lbs / kg
300 / 136	0	300 / 136

Cyclo-cross
CONDITION 2

Cyclo-cross Bikes are designed for riding Condition 1, plus smooth gravel roads and improved trails with moderate grades where the tires do not lose contact with the ground.

INTENDED For cyclo-cross riding, training and racing.

Cyclo-cross involves riding on a variety of terrain and surfaces including dirt or mud surfaces. Cyclo-cross bikes also work well for all weather, rough road riding and commuting.

NOT INTENDED For off road or mountain bike use, or jumping. Cyclo-cross riders and racers dismount before reaching an obstacle, carry their bike over the obstacle and then remount. Cyclo-cross bikes are not intended for mountain bike use. The relatively large road bike size wheels are faster than the smaller mountain bike wheels, but are not as strong.

MAXIMUM WEIGHT LIMIT

RIDER	LUGGAGE	TOTAL
lbs / kg	lbs / kg	lbs / kg
300 / 136	30 / 13.6	330 / 150

Road Tandems
CONDITION 1

Bikes designed for riding on a paved surface where the tires do not lose contact with the ground.

INTENDED To be ridden on paved roads only. They are not designed for mountain biking or off-road use.

NOT INTENDED Road tandem should not be taken off-road or used as a mountain tandem.

MAXIMUM WEIGHT LIMIT

RIDER	LUGGAGE	TOTAL
lbs / kg	lbs / kg	lbs / kg
500 / 227	75 / 34	575 / 261

Mountain Tandems

CONDITION 2

Bikes designed for riding Condition 1, plus smooth gravel roads and improved trails with moderate grades where the tires do not lose contact with the ground.

INTENDED The challenges of mountain biking are obvious. The added challenges of tandem riding mean that you should limit off-road tandem riding to easy-moderate terrain.

NOT INTENDED For very aggressive mountain bike riding. Mountain tandems are most definitely NOT for Downhill, Freeriding or North Shore. Choose terrain with the abilities of both the Tandem's captain and stoker in mind.

MAXIMUM WEIGHT LIMIT

RIDER	LUGGAGE	TOTAL
lbs / kg	lbs / kg	lbs / kg
500 / 227	75 / 34	575 / 261

APPENDIX B

THE LIFESPAN OF YOUR BIKE AND ITS COMPONENTS

1. Nothing Lasts Forever, Including Your Bike.

When the useful life of your bike or its components is over, continued use is hazardous.

Every bicycle and its component parts have a finite, limited useful life. The length of that life will vary with the construction and materials used in the frame and components; the maintenance and care the frame and components receive over their life; and the type and amount of use to which the frame and components are subjected. Use in competitive events, trick riding, ramp riding, jumping, aggressive riding, riding on severe terrain, riding in severe climates, riding with heavy loads, commercial activities and other types of non-standard use can dramatically shorten the life of the frame and components. Any one or a combination of these conditions may result in an unpredictable failure.

All aspects of use being identical, lightweight bicycles and their components will usually have a shorter life than heavier bicycles and their components. In selecting a lightweight bicycle or components you are making a tradeoff, favoring the higher performance that comes with lighter weight over longevity. So, if you do choose lightweight, high performance equipment, be sure to have it inspected frequently.

You should have your bicycle and its components checked periodically by your local mechanic for indicators of stress and/or potential failure, including cracks, deformation, corrosion, paint peeling, dents, and any other indicators of potential problems, inappropriate use or abuse. These are important safety checks and are very important to help prevent accidents, bodily injury to the rider and shortened product life of the bicycle.

2. Perspective

Today's high-performance bicycles require frequent and careful inspection and service. In this Appendix we try to explain some underlying material science basics and how they relate to your bicycle. We discuss some of the trade-offs made in designing your bicycle and what you can expect from your bicycle. We will provide important, basic guidelines on how to maintain and inspect it. However, we cannot teach you everything you need to know about how to properly inspect and service your bicycle; and that is why we repeatedly urge you to take your bicycle to your local mechanic for professional care and attention.

⚠**WARNING:** Frequent inspection of your bike is important to your safety. Follow the Mechanical Safety Check in Section 2.C of this Manual before every ride.

Periodic, further detailed inspection of your bicycle is important. How often this further detailed inspection is needed depends upon you.

You, the rider/owner, have control and knowledge of how often you use your bike, how hard you use it and where you use it. Because your local mechanic cannot track your use, you must take responsibility for periodically bringing your bike to your local mechanic for inspection and service. Your local mechanic will help you decide what frequency of inspection and service is appropriate for how and where you use your bike.

For your safety, understanding and communication with your local mechanic, we urge you to read this Appendix in its entirety. The materials used to make your bike determine how and the frequency for which you go for inspection. Ignoring this WARNING can lead to frame, fork or other component failure, which can result in serious injury or death.

A. Understanding metals

Steel is the traditional material for building bicycle frames. It has good characteristics, but in high performance bicycles, steel has been largely replaced by aluminum and some titanium. The main factor driving this change is interest by cycling enthusiasts for lighter bicycles.

Properties of Metals

Please understand that there is no simple statement that can be made that characterizes the use of different metals for bicycles. What is true is the application of the metal chosen is much more important than the material alone. One must look at the way the bike is designed, tested, manufactured and supported along with the characteristics of the metal rather than seeking a simplistic answer.

Metals vary widely in their resistance to corrosion. Steel must be protected or rust will attack it. Aluminum and Titanium quickly develop an oxide film that protects the metal from further corrosion. Both are therefore quite resistant to corrosion. Aluminum is not perfectly corrosion resistant, and particular care must be used where it comes in contact with other metals and galvanic corrosion can occur.

Metals are comparatively ductile. Ductile means bending, buckling and stretching before breaking. Generally speaking of the most common bicycle frame building materials, steel is the most ductile, titanium less ductile, followed by aluminum.

Metals vary in density. Density is the weight per unit of material. Steel weighs 7.8 grams/cm3 (grams per cubic centimeter), titanium 4.5 grams/cm3, aluminum 2.75 grams/cm3. Contrast these numbers with the composite of carbon fiber at 1.45 grams/cm3.

Metals are subject to fatigue. With enough cycles of use, at heavy enough loads, metals will eventually develop cracks that lead to failure. It is very important that you read the basics of metal fatigue below.

If you hit a curb, ditch, rock, car, another cyclist or other object at any speed above a fast walk, your body will continue to move forward, momentum carrying you over the front of the bike. You cannot and will not stay on the bike. What happens to the frame, fork and other components is irrelevant to what happens to your body.

What should you expect from your metal frame? This depends on many complex factors, which is why we maintain that

crashworthiness cannot be part of design criteria.

With that important note, we can tell you that if the impact is hard enough the fork or frame may bend or buckle. On a steel bike, the steel fork may be severely bent but leave the frame undamaged. Aluminum is less ductile than steel, but you can expect the fork and frame to be bent or buckle. If your hit is even harder the top tube may break and the down tube may buckle. Hit even harder than that and the top tube may break, the down tube buckle and break, leaving the head tube and fork separated from the main triangle.

When a metal bike crashes, you will usually see some evidence of this ductility in bent, buckled or folded metal. It is now common for the main frame to be made of metal and the fork of carbon fiber. See Section B, Understanding Composites below. The relative ductility of metals and the lack of ductility of carbon fiber means that in a crash scenario you can expect some bending or bucking in the metal but none in the carbon. Below some load the carbon fork may be intact even though the frame is damaged. Above some load the carbon fork will be completely broken.

The basics of metal fatigue

Common sense tells us that nothing that is used lasts forever. The more you use something, the harder you use it, and the worse the conditions you use it in, the shorter its life.

Fatigue is the term used to describe accumulated damage to a part caused by repeated loading. When the load the part receives is great enough, it causes fatigue damage. A crude, often-used example is bending a paper clip back and forth (repeated loading) until it breaks. This simple definition will help you understand that fatigue has nothing to do with time or age. A bicycle in a garage does not fatigue. Fatigue happens only through use.

So what kind of "damage" are we talking about? On a microscopic level, a crack forms in a highly stressed area. As the load is repeatedly applied, the crack grows. At some point the crack becomes visible to the naked eye. Eventually it becomes so large that the part is too weak to carry the load that it could carry without the crack. At that point there can be a complete and immediate failure of the part.

Conceivably, it is possible to design a part that is so strong that its fatigue life is nearly infinite. However, this requires a lot of material and a lot of weight. Any structure that must be light and strong will have a finite fatigue life. Aircraft, racecars and motorcycles all have parts with finite fatigue lives. If you wanted a bicycle with an infinite fatigue life, it would weigh far more than any bicycle sold today. So there is a tradeoff: the wonderful, lightweight performance we want and the durability of it.

What to look for

ONCE A CRACKS STARTS IT CAN GROW AND GROW FAST. Think about the crack as forming a pathway to failure. This means that any crack is potentially dangerous and will only become more dangerous.	SIMPLE RULE 1 : If you find crack, replace the part.
CORROSSION SPEEDS DAMAGE. Cracks grow more quickly when they are in a corrosive environment. Think about the corrosive solution as further weakening and extending the crack.	SIMPLE RULE 2 : Clean your bike, lubricate your bike, protect your bike from salt, remove any salt as soon as you can.
STAINS AND DISCOLORATION CAN OCCUR NEAR A CRACK. Such staining may be a warning sign that a crack exists.	SIMPLE RULE 3 : Inspect and investigate any staining to see if it is associated with a crack.
SIGNIFICANT SCRATCHES, GOUGES, DENTS OR SCORING CREATE STARTING POINTS FOR CRACKS. Think about the cut surface as a focal point for stress (in fact engineers call such areas "stress risers," areas where the stress is increased). Perhaps you have seen glass cut? Recall how the glass was scored and then broke on the scored line.	SIMPLE RULE 4 : Do not scratch, gouge or score any surface. If you do, pay frequent attention to this area or replace the part.
SOME CRACKS (particularly larger ones) MAY MAKE CREAKING NOISE AS YOU RIDE. Think about such a noise as a serious warning signal. Note that a well-maintained bicycle will be very quiet and free of creaks and squeaks.	SIMPLE RULE 5 : Investigate and find the source of any noise. It may not a be a crack, but whatever is causing the noise should be fixed promptly.

In most cases a fatigue crack is not a defect. It is a sign that the part has been worn out, a sign the part has reached the end of its useful life. When your car tires wear down to the point that the tread bars are contacting the road, those tires are not defective. Those tires are worn out and the tread bar says "time for replacement." When a metal part shows a fatigue crack, it is worn out. The crack says "time for replacement."

Fatigue Is Not A Perfectly Predictable Science

Fatigue is not a perfectly predictable science, but here are some general factors to help you and your local mechanic determine how often your bicycle should be inspected. The more you fit the "shorten product life" profile, the more frequent your need to inspect. The more you fit the "lengthened product life" profile, the less frequent your need to inspect.

Factors that shorten product life:

- Hard, harsh riding style
- "Hits", crashes, jumps, other "shots" to the bike
- High mileage
- Higher body weight
- Stronger, more fit, more aggressive rider
- Corrosive environment (wet, salt air, winter road salt, accumulated sweat)
- Presence of abrasive mud, dirt, sand, soil in riding environment

Factors that lengthen product life:

- Smooth, fluid riding style
- No "hits", crashes, jumps, other "shots" to the bike
- Low mileage
- Lower body weight
- Less aggressive rider
- Non-corrosive environment (dry, salt-free air)
- Clean riding environment

⚠**WARNING:** Do not ride a bicycle or component with any crack, bulge or dent, even a small one. Riding a cracked frame, fork or component could lead to complete failure, with risk of serious injury or death.

B. Understanding composites

All riders must understand a fundamental reality of composites. Composite materials constructed of carbon fibers are strong and light, but when crashed or overloaded, carbon fibers do not bend, they break.

What Are Composites?

The term "composites" refers to the fact that a part or parts are made up of different components or materials. You've heard the term "carbon fiber bike." This really means "composite bike."

Carbon fiber composites are typically a strong, light fiber in a matrix of plastic, molded to form a shape. Carbon composites are light relative to metals. Steel weighs 7.8 grams/cm3 (grams per cubic centimeter), titanium 4.5 grams/cm3, aluminum 2.75 grams/cm3. Contrast these numbers with carbon fiber composite at 1.45 grams/cm3

The composites with the best strength-to-weight ratios are made of carbon fiber in a matrix of epoxy plastic. The epoxy matrix bonds the carbon fibers together, transfers load to other fibers, and provides a smooth outer surface. The carbon fibers are the "skeleton" that carries the load.

Why Are Composites Used?

Unlike metals, which have uniform properties in all directions (engineers call this isotropic), carbon fibers can be placed in specific orientations to optimize the structure for particular loads. The choice of where to place the carbon fibers gives engineers a powerful tool to create strong, light bicycles. Engineers may also orient fibers to suit other goals such as comfort and vibration damping.

Carbon fiber composites are very corrosion resistant, much more so than most metals.

Think about carbon fiber or fiberglass boats. Carbon fiber materials have a very high strength-to-weight ratio.

What Are The Limits Of Composites?

Well designed "composite" or carbon fiber bicycles and components have long fatigue lives, usually better than their metal equivalents.

While fatigue life is an advantage of carbon fiber, you must still regularly inspect your carbon fiber frame, fork, or components.

Carbon fiber composites are not ductile. Once a carbon structure is overloaded, it will not bend; it will break. At and near the break, there will be rough, sharp edges and maybe delamination of carbon fiber or carbon fiber fabric layers. There will be no bending, buckling, or stretching.

If You Hit Something Or Have A Crash, What Can You Expect From Your Carbon Fiber Bike?

Let's say you hit a curb, ditch, rock, car, other cyclist or other object. At any speed above a fast walk, your body will continue to move forward, the momentum carrying you over the front of the bike. You cannot and will not stay on the bike and what happens to the frame, fork and other components is irrelevant to what happens to your body.

What should you expect from your carbon frame? It depends on many complex factors. But we can tell you that if the impact is hard enough, the fork or frame may be completely broken. Note the significant difference in behavior between carbon and metal. See Section 2. A "Understanding metals" in this Appendix. Even if the carbon

frame was twice as strong as a metal frame, once the carbon frame is overloaded it will not bend, it will break completely.

Inspection of Composite Frame, Fork, and Components
Cracks:
Inspect for cracks, broken, or splintered areas. Any crack is serious. Do not ride any bicycle or component that has a crack of any size. Delamination:
Delamination is serious damage. Composites are made from layers of fabric. Delamination means that the layers of fabric are no longer bonded together. Do not ride any bicycle or component that has any delamination.
These are some delamination clues:

A cloudy or white area. This kind of area looks different from the ordinary undamaged areas. Undamaged areas will look glassy, shiny, or "deep," as if one was looking into a clear liquid. Delaminated areas will look opaque and cloudy.
Bulging or deformed shape. If delamination occurs, the surface shape may change. The surface may have a bump, a bulge, soft spot, or not be smooth and fair.
A difference in sound when tapping the surface. If you gently tap the surface of an undamaged composite you will hear a consistent sound, usually a hard, sharp sound. If you then tap a delaminated area, you will hear a different sound, usually duller, less sharp.

Unusual Noises:
Either a crack or delamination can cause creaking noises while riding. Think about such noises as a serious warning signal. A well maintained bicycle will be very quiet and free of creaks and squeaks. Investigate and find the source of any noise. It may not be a crack or delamination, but whatever is causing the noise must be fixed before riding.

⚠**WARNING:** Do not ride a bicycle or component with any delamination or crack. Riding a delaminated or cracked frame, fork or other component could lead to complete failure, with risk of serious injury or death.

C. Understanding components

It is often necessary to remove and disassemble components in order to properly and carefully inspect parts. This is a job for a professional bicycle mechanic with the special tools, skills and experience to inspect and service today's high-tech high-performance bicycles and their components.

Aftermarket "Super Light" components
Think carefully about your rider profile as outlined above. The more you fit the "shorten product life" profile, the more you must question the use of super light components. The more you fit the "lengthen product life" profile, the more likely it is that lighter components may be suitable for you. Discuss your needs and your profile very honestly with your dealer.
Take these choices seriously and understand that you are responsible for the changes. A useful slogan to discuss with your dealer if you are contemplating changing components is "Strong, Light, Cheap –pick two."
The original equipment components on your bicycle and the fatigue life of the components that are part of the original equipment on your bike have been tested by manufactures. This means that they have met test criteria and have a reasonable fatigue life. It does not mean that the original components will last forever. They will not.

APPENDIX C

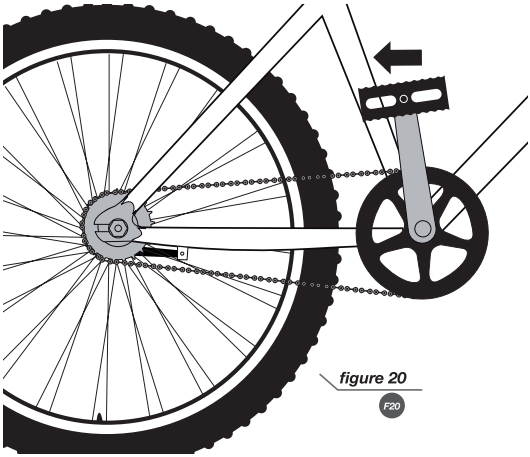

figure 20

F20

COASTER BRAKE

1. How the coaster brake works

The coaster brake is a sealed mechanism which is a part of the bicycle's rear wheel hub. The brake is activated by reversing the rotation of the pedal cranks (see figure 20). Start with the pedal cranks in a nearly horizontal position, with the front pedal in about the 4 o'clock position, and apply downward foot pressure on the pedal that is to the rear. About 1/8 turn rotation will activate the brake.

The more downward pressure you apply, the more braking force, up to the point where the rear wheel stops rotating and begins to skid.

⚠**WARNING:** Before riding, make sure that the brake is working properly. If it is not working properly, have the bicycle checked by your local mechanic before you ride it.

⚠**WARNING:** If your bike has only a coaster brake, ride conservatively. A single rear brake does not have the stopping power of front-and rear brake systems.

2. Adjusting your coaster brake

Coaster brake service and adjustment requires special tools and special knowledge. Do not attempt to disassemble or service your coaster brake. Take the bicycle to your local mechanic for coaster brake service.

APPENDIX D

Fastener Torque Specifications

Correct tightening torque of threaded fasteners is very important to your safety. Always tighten fasteners to the correct torque. In case of a conflict between the instructions in this manual and information provided by a component manufacturer, consult with a BULLS representative or the manufacturer's customer service representative for clarification. Bolts that are too tight can stretch and deform. Bolts that are too loose can move and fatigue. Either mistake can lead to a sudden failure of the bolt.

Always use a correctly calibrated torque wrench to tighten critical fasteners on your bike. Carefully follow the torque wrench manufacturer's instructions on the correct way to set and use the torque wrench for accurate results.

FASTENER RECOMMENDED TORQUE

WHEELS
PEDALS
SEAT POST CLAMP
SEAT CLAMP
STEERER CLAMP
HANDLEBAR CLAMP
CONTROL LEVER CLAMPS

BULLS

www.bullsbikesusa.com